DAFTAR ISI

TL-008 Ultrasonic Remote Control (Transmitter) 1
TL-008A Ultrasonic Remote Control (Receiver) ..... 2 - 3
TL-101A 3 Way Disco Musicolor Light ..... 4 - 5
TL-107 D.C. 3 Way Electronic Sign Flasher (Satu Padam-Dua Nyala) 6
TL-107A D.C. 3 Way Electronic Sign Flasher (Dua Padam-Satu Nyala) 7
TL-110A Electronic Strobo Light A.C. 90V-125V ..... 8 - 9
TL-110B Electronic Strobo Light A.C. 150V-220V ..... 10 - 11
TL-111 D.C. Electronic Strobo Light. D.C. 6V-12V ..... 12 - 13
TL-200 Touch Switch (Touch On – Touch Off Type) ..... 14 - 15
TL-207A Sound Activated Electronic Chirping Bird ..... 16 - 17
TL-208 Light Control Alarm 18
TL-210 Anti Theft Ultrasonic Switch (Transmitter) 19
TL-210A Anti Theft Ultrasonic Switch (Receiver) ..... 20 - 21
TL-220A Light Control Switch ..... 22 - 23
TL-301 L.E.D. VU Display.(DC 4V-12V) ..... 24 - 25
TL-302 L.E.D. VU Display (Langsung Output Amplifier) ..... 26 - 27
TL-303 L.E.D. VU Display (Langsung Output Amplifier Kecil) ..... 28 - 29
TL-304 L.E.D. VU Display (Untuk Preamplifier) ..... 30 - 31
TL-305 Stereo VU Booster ..... 32 - 33
TL-501 Automatic Battery Charger 5A ..... 34 - 35
TL-502 Automatic Battery Charger 500mA ..... 36 - 37
TL-503 D.C. Fluorescent Lamp Converter 10Watt- 32 Watt ..... 38 - 39
TL-504 D.C. Fluorescent Lamp Converter 40 Watt ..... 40 - 41
TL-505 Emergency Light (Lampu Darurat) ..... 42 - 43
TL-999 Police Alarm (Output 3 Watt) ..... 44 - 45
TL-999A Police Alarm (Output 8 Watt) ..... 46 - 47
TL-999M Mini Police Alarm ..... 48 - 49
TL-1005 Stereo Graphic Equaliser ..... 50 - 52
Diode Detector Radio Receiver (Radio Crystal) 53
Radio MW 700Kc-1300Kc ..... 54 - 55
FM Wireless Microphone 88MHz-108MHz 56
60 Hz Time Base X'tal Oscillator 57
PRE 2A Stereo Tape Head Playback Amplifier ..... 58 - 59
D.C. 4V-9V Regulator 60

ULTRA SONIC REMOTE CONTROL

(TRANSMITTER)

R.1 ..... 12K
R.2 ..... 22K
VR 10K
C.1 ..... 1KpF
C.2 ..... 10KpF
IC.. ..... MC 1455
SCS-401 .... 40KHz Ultrasonic Transducer

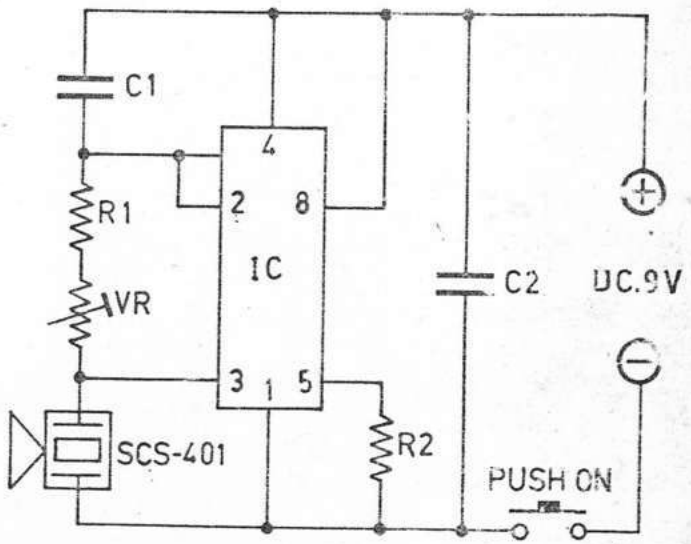

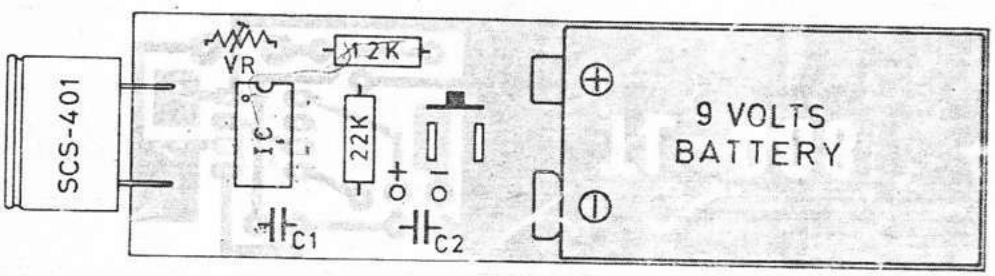

TL-008

TL-008A

PARTS LIST

R.1.7. ..... 100K
R.2. ..... 10K
R.3. ..... 3K9
R.4. 100
R.5. 680
R.6 470
R.8. 560
R.9. ..... 6K8
C.1. ..... 200pF
C.2. ..... 1uF

C.3.4. ..... 10KpF
C.5.6. ..... 10uF
C.7. ..... 47uF
D.1.2. ..... 1N 4148
D.3.4. ..... 1N 4002
TR.1.2.3 ..... FCS 9014
TR.4 ..... FCS 9013
IC. ..... SN 7473
SCM-401.....40KHz Ultrasonic Transducer
Relay ..... 6V/100 Ohm

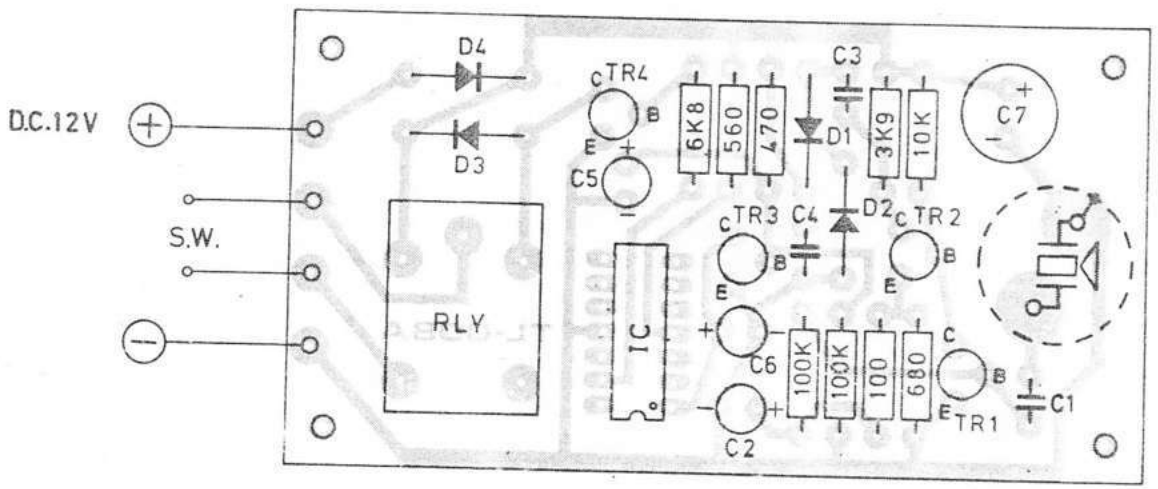

ULTRA SONIC REMOTE CONTROL

(RECEIVER)

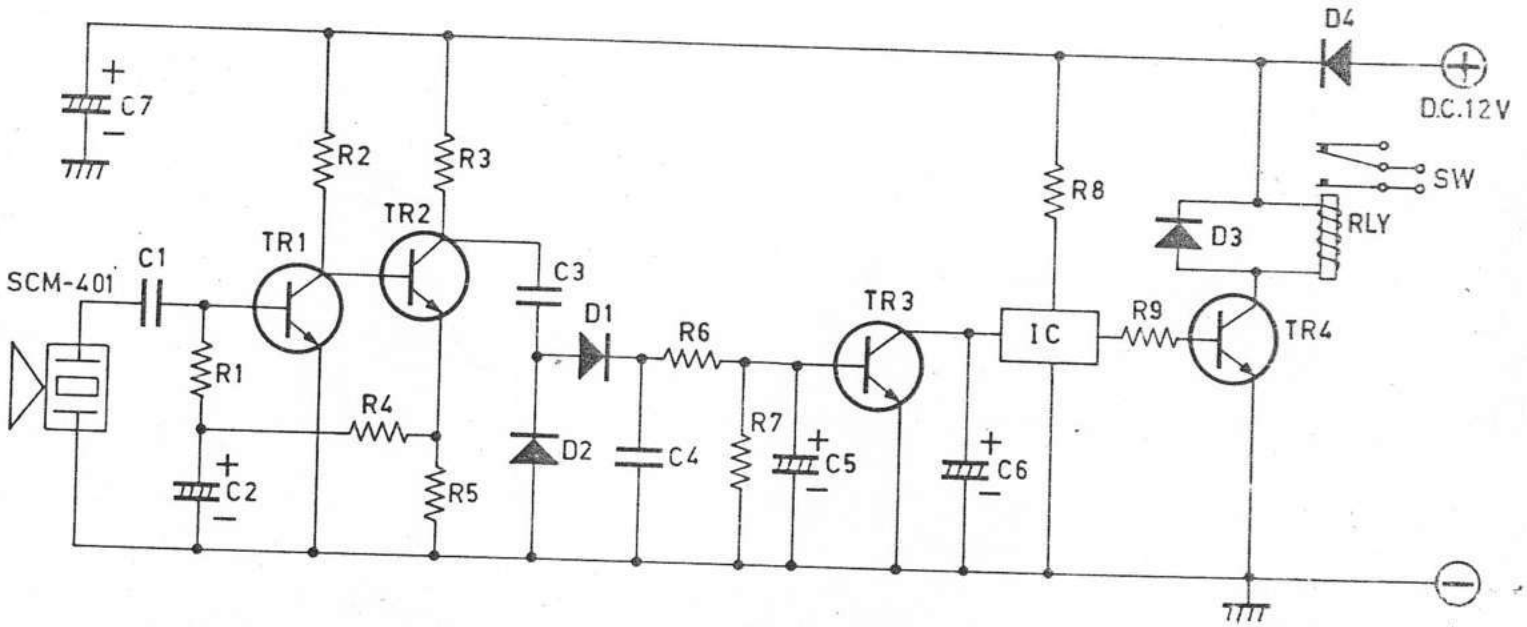

TL-008A

CIRCUIT DIAGRAM

TL-101A

PARTS LIST

R.1	2K2	VR.1	5K	C.6.7.8	1μF
R.2.5.9	220Ω	VR.2.3.4	10K		
R.3.7.10	10K	C.1	1KpF	D.1–6	1N 4148
R.4	1K2	C.2.5	0,1μF	TR.1.3.5	FCS9014
R.6	3K3	C.3	0,047μF	TR.2.4.6	B512
R.8	4K7	C.4	0,022μF	T	P:200Ω / S : 5 KΩ

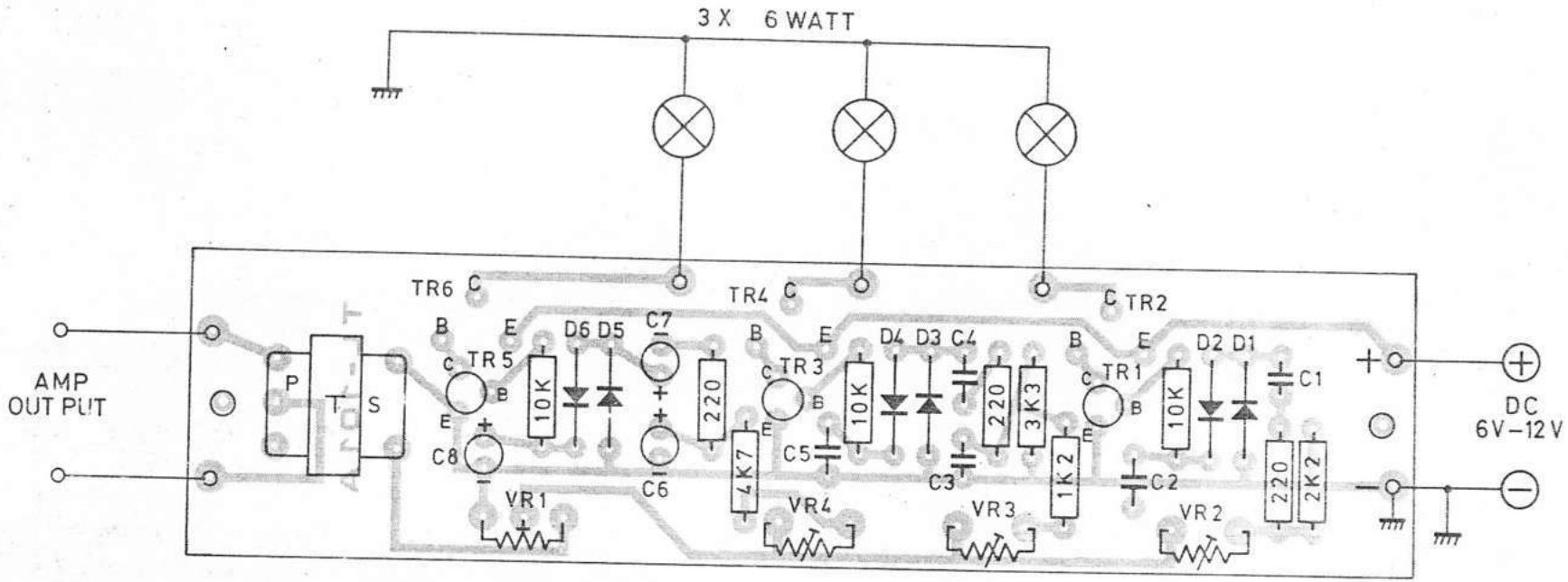

3 WAY DISCO MUSICOLOR LIGHT

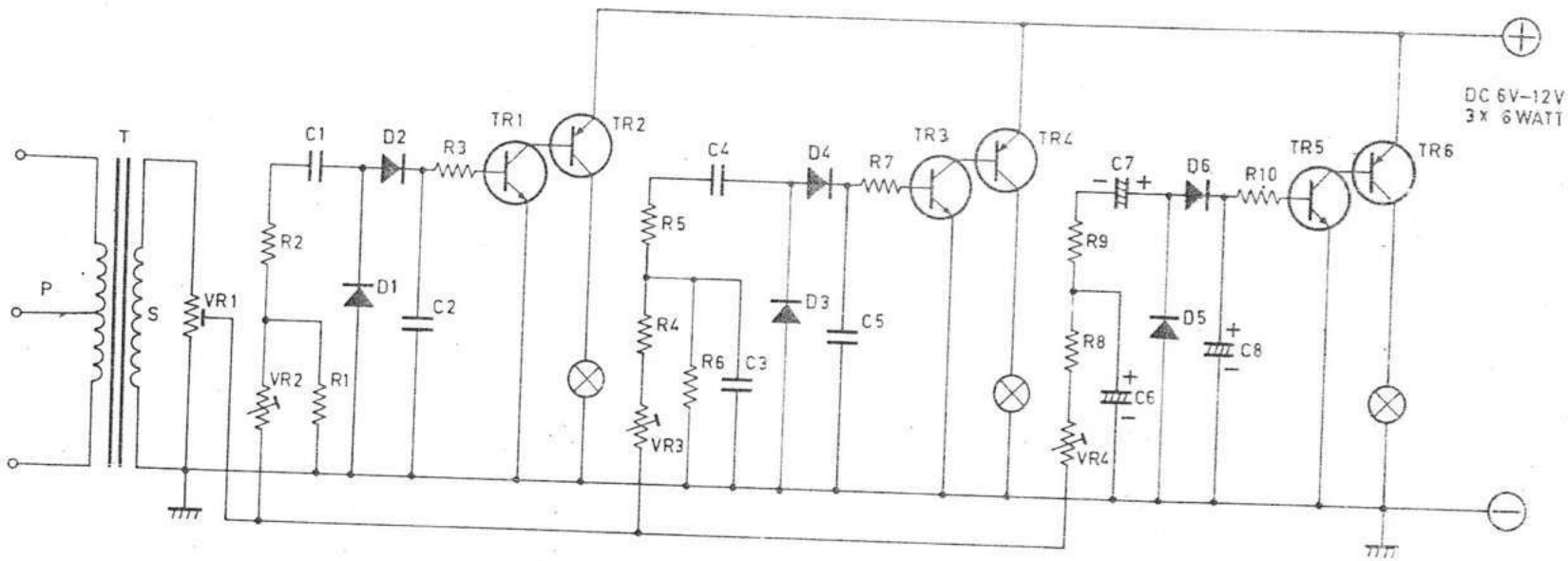

TL-101A

CIRCUIT DIAGRAM

D.C. 3 WAY ELECTRONIC SIGN FLASHER

R1.2.3	150Ω
VR1.2.3.	1 K
C1.2.3	100μF16V
D1.2.3	IN4002
TR.1.2.3	B 512

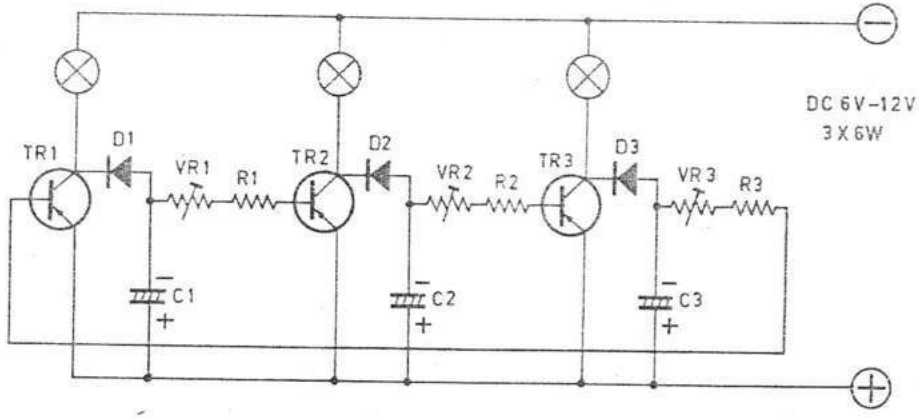

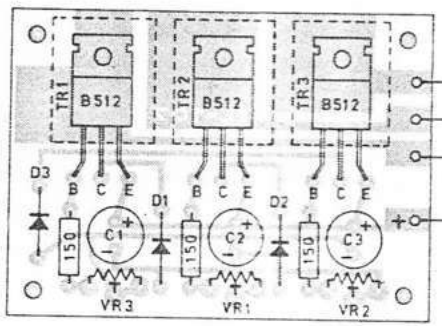

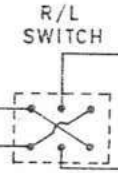

DC 6V-12V

TL-107

(SATU PADAM DUA NYALA)

D.C. 3 WAY ELECTRONIC SIGN FLASHER

R.1.2.3 470
VR.1.2.3 .....1 K
C.1.2.3 ..... 100uF/16V
D.....6X..... 1N 4002
TR.1.3.5 ..... FCS 9012
TR.2.4.6 ..... B 512

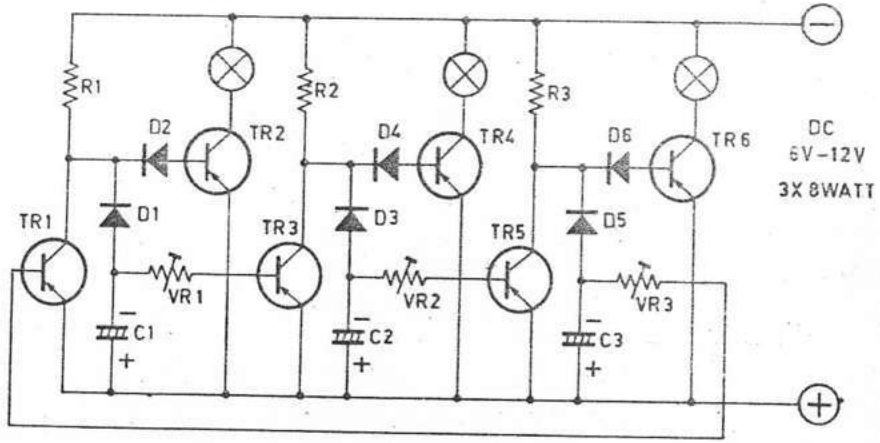

TL-107A

(DUA PADAM SATU NYALA)

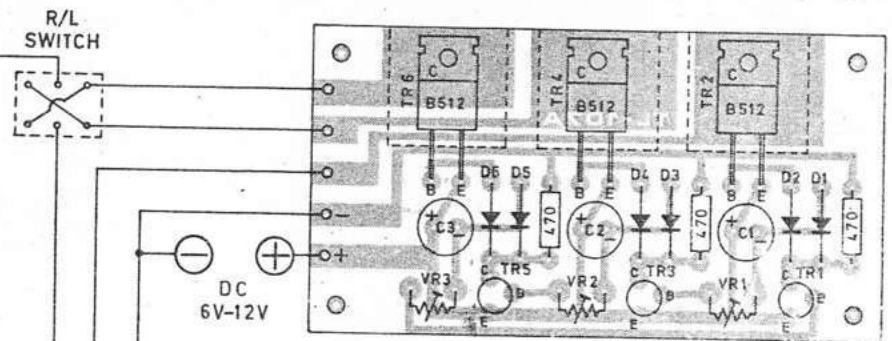

TL-110A

PARTS LIST

R.1.4	470K	C.1.2.3.4	220uf/450V	SCR. 1.	F7-21S
R:2	330K	C.5	0,02uF/100V	SCR.2	C10
R.3	2M2	C.6	0,1uF/250V	FT–118	Xenon Flash Tube
R.5	100K	C.7	0,22uF/250V	T	Trigger Coil
R.6	470	D.1.2.3.4	1N 5404	Ne	Neon Lamp
VR	1 M				

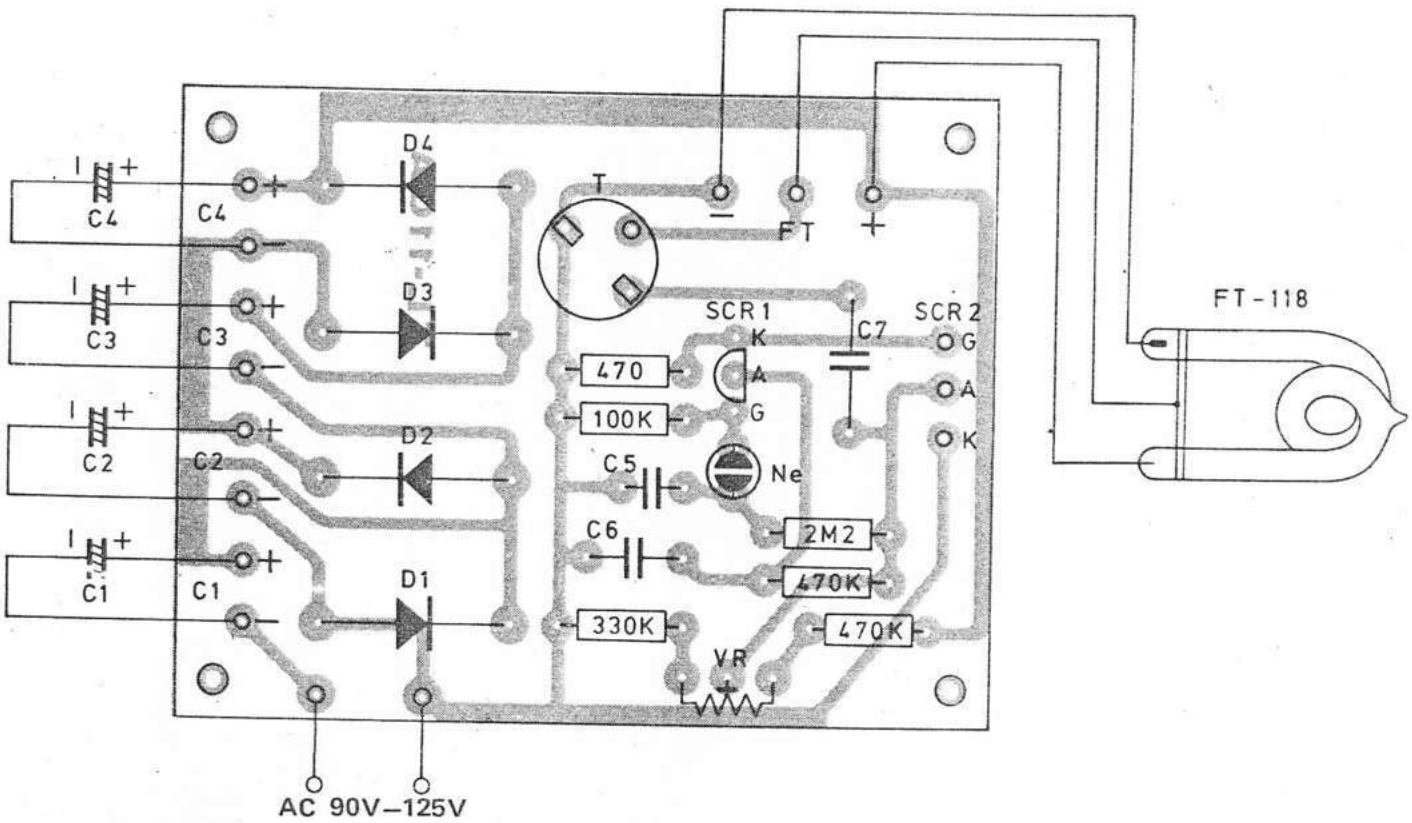

ELECTRONIC STROBO LIGHT

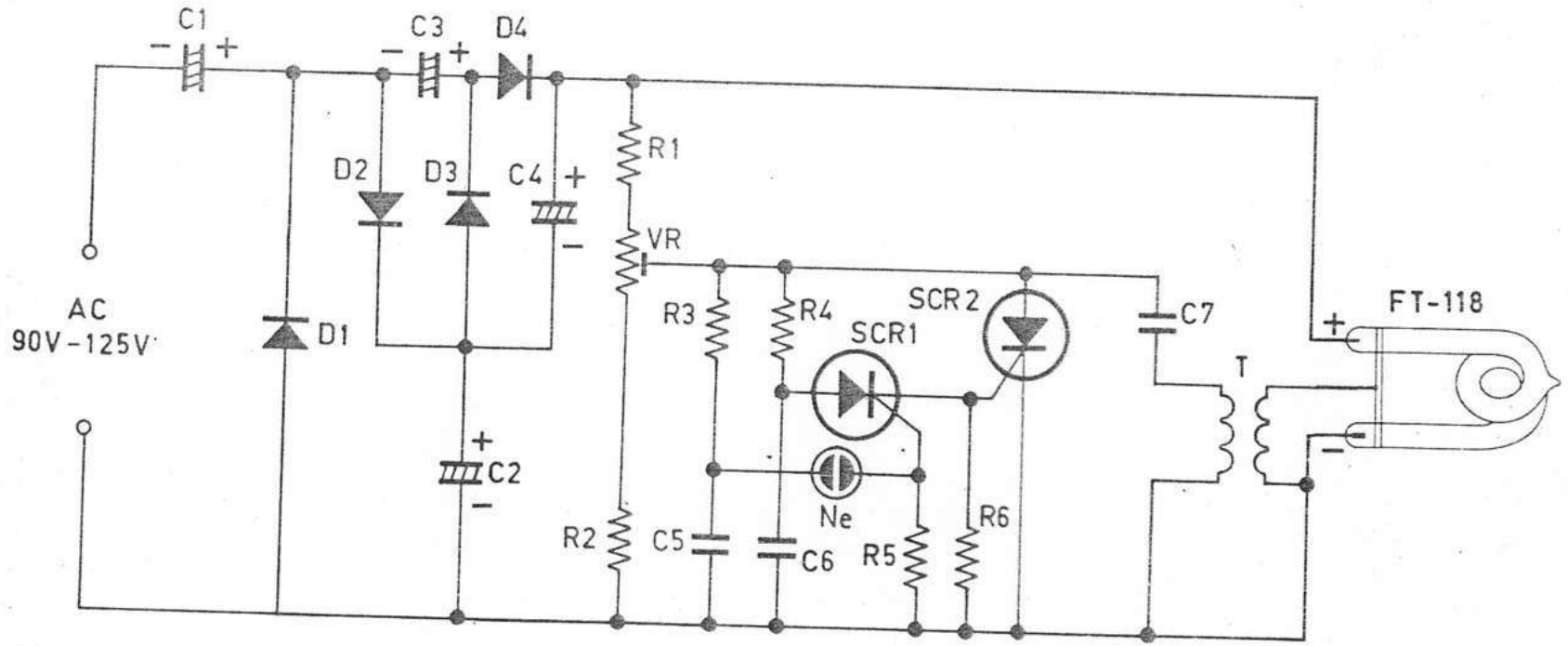

TL-110A

CIRCUIT DIAGRAM

TL-110B

PARTS LIST

R.1.4.	470K	C.1.2.3	220uF/350V	SCR.1	EC 103D
R.2.	330K	C.4.	0,02uF/100V	SCR.2.	C 10
R.3.	2M2	C.5.	0,1uF/100V	T.	Trigger Coil.
R.5.	100K	C.6.	0,22uF/250V	FT-118	Xenon Flash Tube
R.6.	470	D.1.2	1 N 5404	Ne.	Neon Lamp
VR.	1 M				

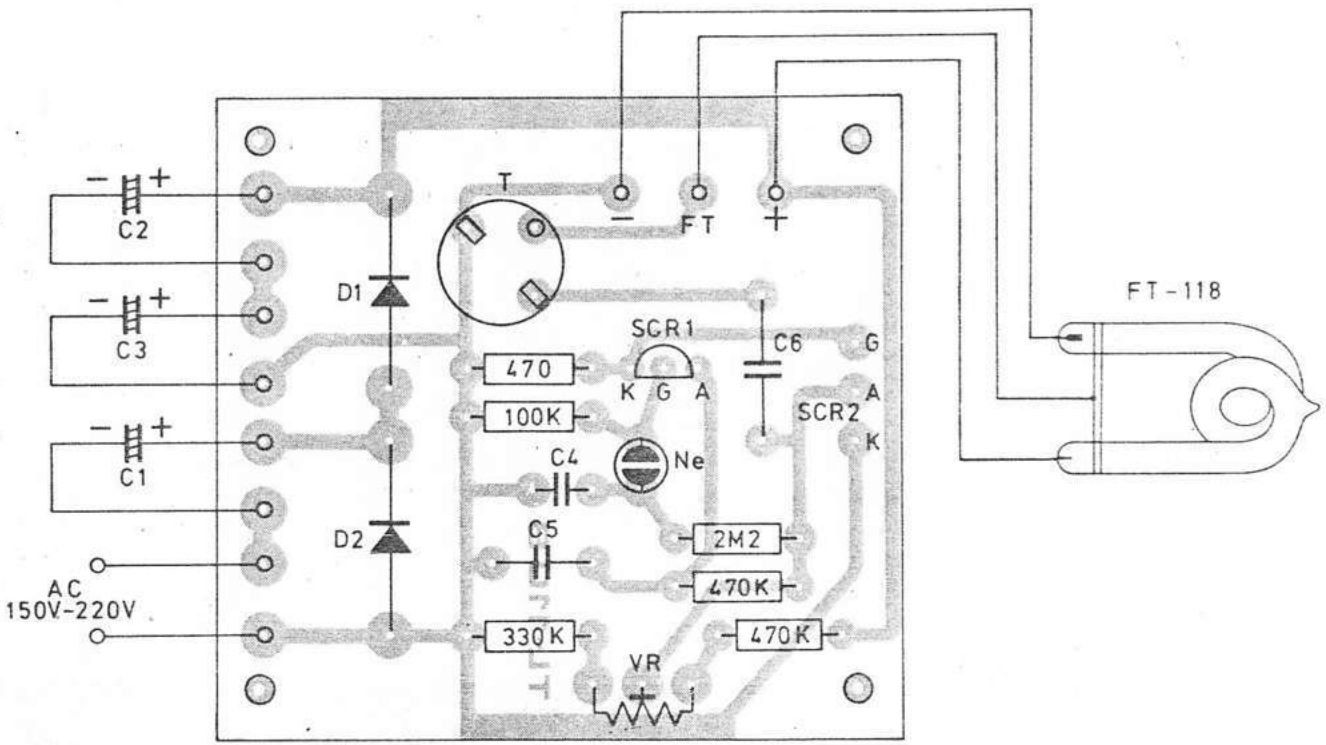

ELECTRONIC STROBO LIGHT

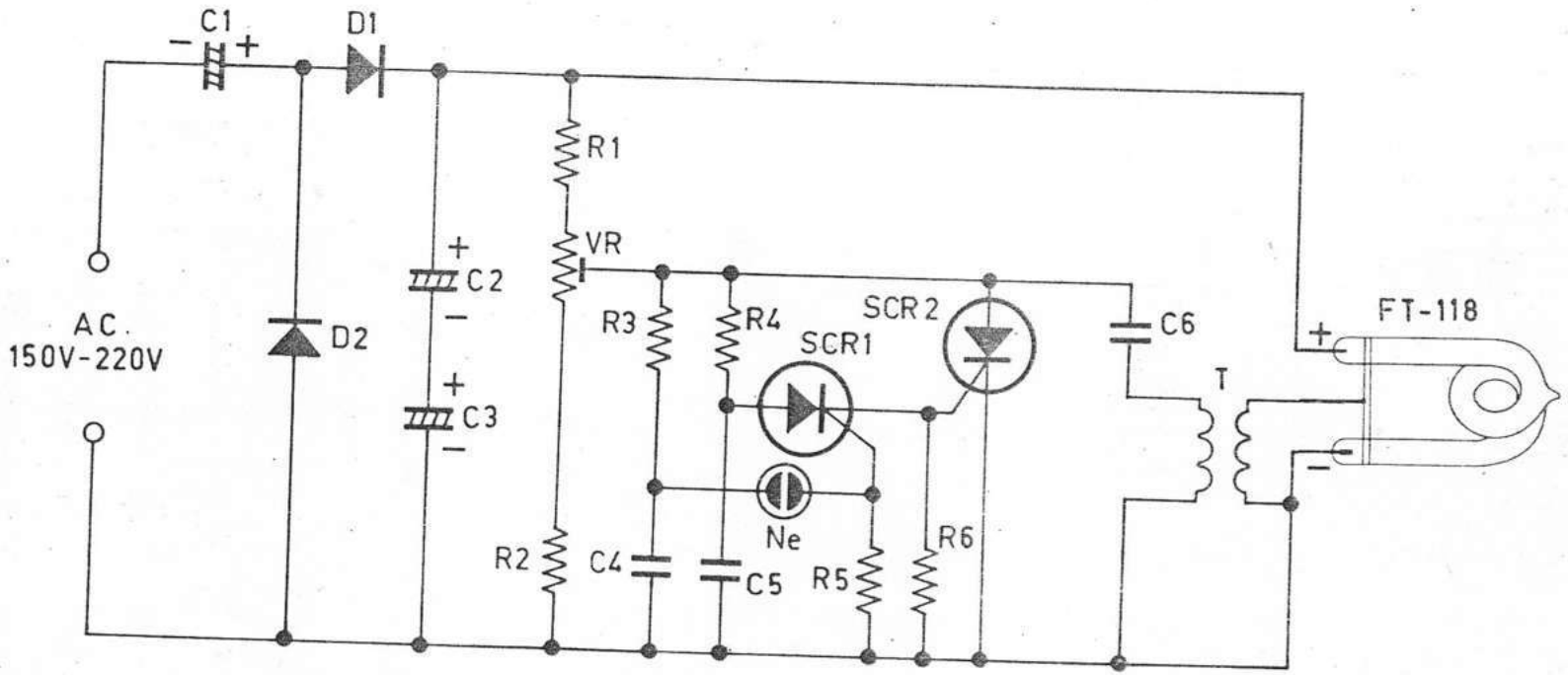

TL-110B

CIRCUIT DIAGRAM

TL-111

PARTS LIST

R.1	390
R.2	1K
R.3.6	100K
R.4	330K
R.5	2M2
R.7	470
VR	1M
C.1	0.047 uF
C.2	220 uF/16V
C.3	47 uF/450V
C.4	0.02 uF
C.5	0.22 uF
TR	C 1061
SCR.1	EC103D
SCR.2	C 10
D.1-4	1N 4007
T.1	T-20
T.2	Trigger Coil
FT-106	Xenon Flash Tube

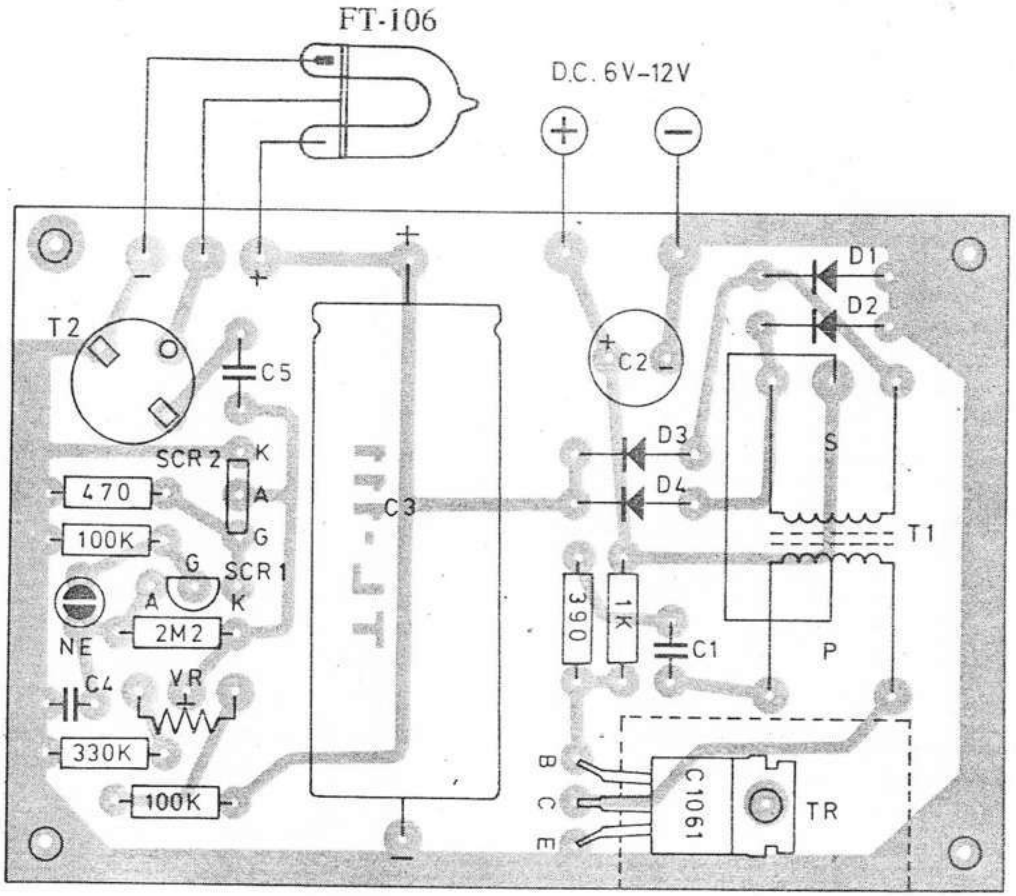

DC ELECTRONIC STROBO LIGHT

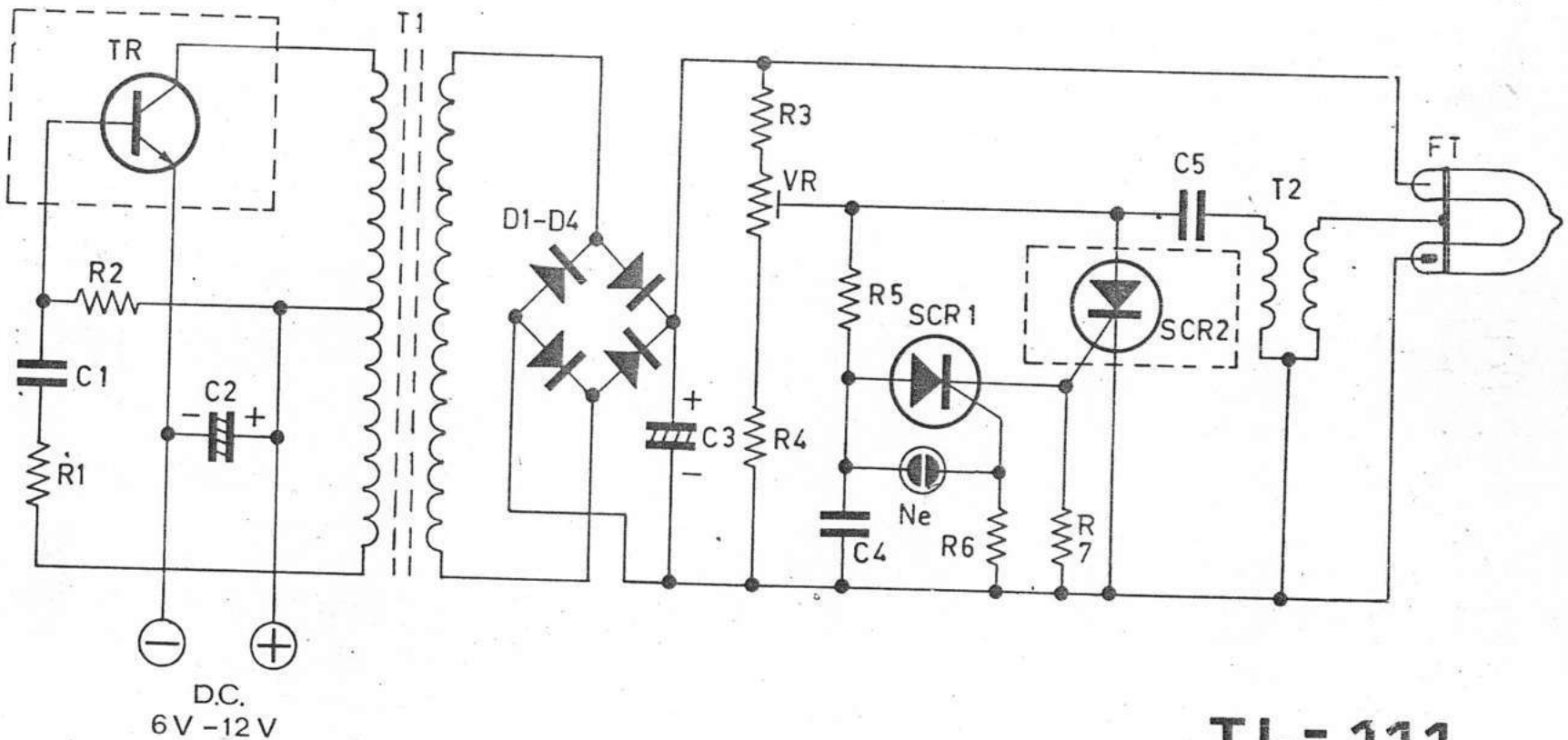

TL-111

CIRCUIT DIAGRAM

TL-200

PARTS LIST

R.1 ..... 4,7K
R.2.4 ..... 15K
R.3.5 ..... 220K
R.6 ..... 150K
R.7 470
R.8.10 ..... 1K
R.9 100
VR 10K

C.1 ..... 1uF
C.2 ..... 0,01uF
C.3 ..... 0,1uF
C.4.5.6 ..... 2,2uF
C.7.8 ..... 1000uF/16V

TR.1.2.3.4 ..... FCS 9014
TR.5 ..... FCS 9013
D.1.2.3.4.5.6 ..... 1N 4002
D.7 ..... L.E.D
IC ..... SN 7473
S ..... Reed Switch
T ..... P :110V–220V
S :9V

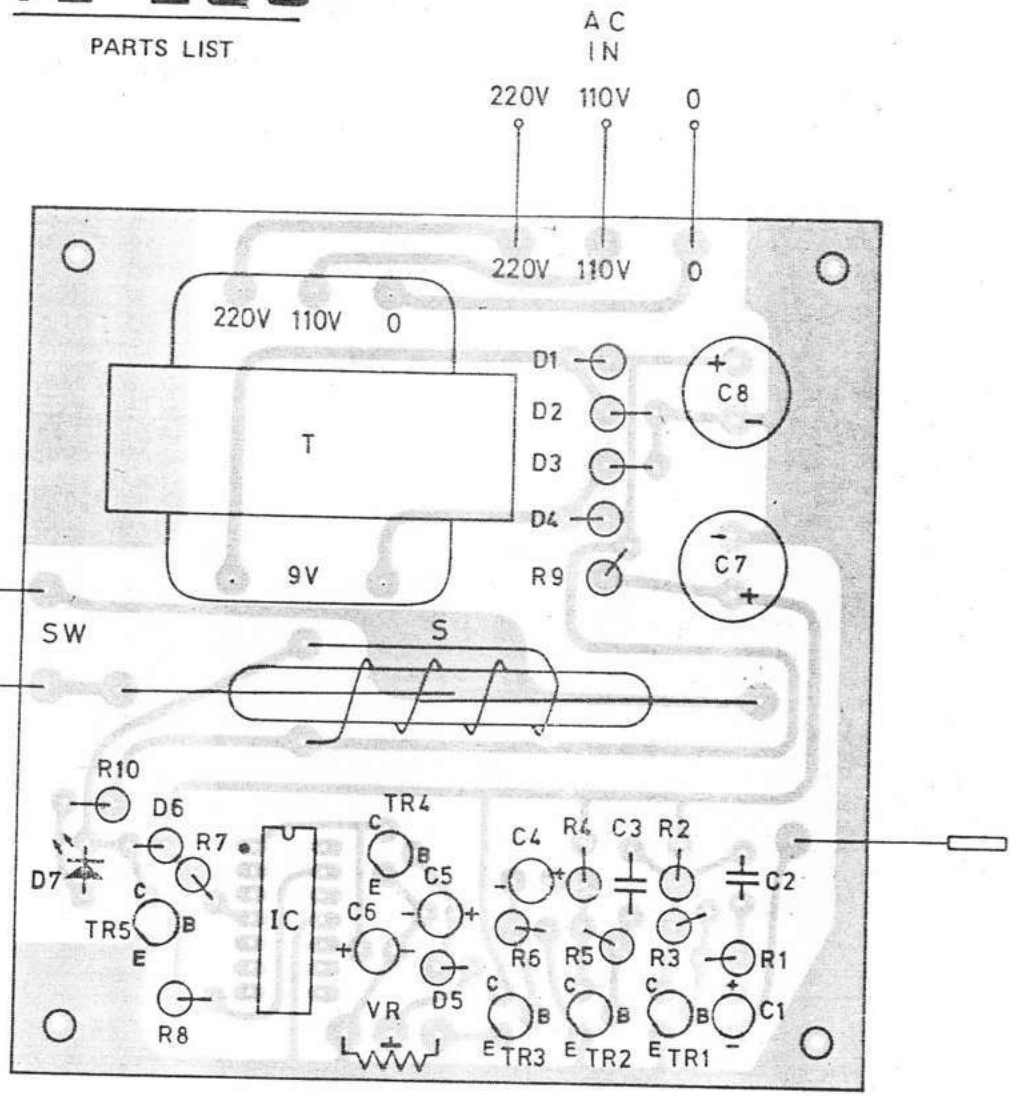

TOUCH SWITCH

TOUCH ON-TOUCH OFF TYPE

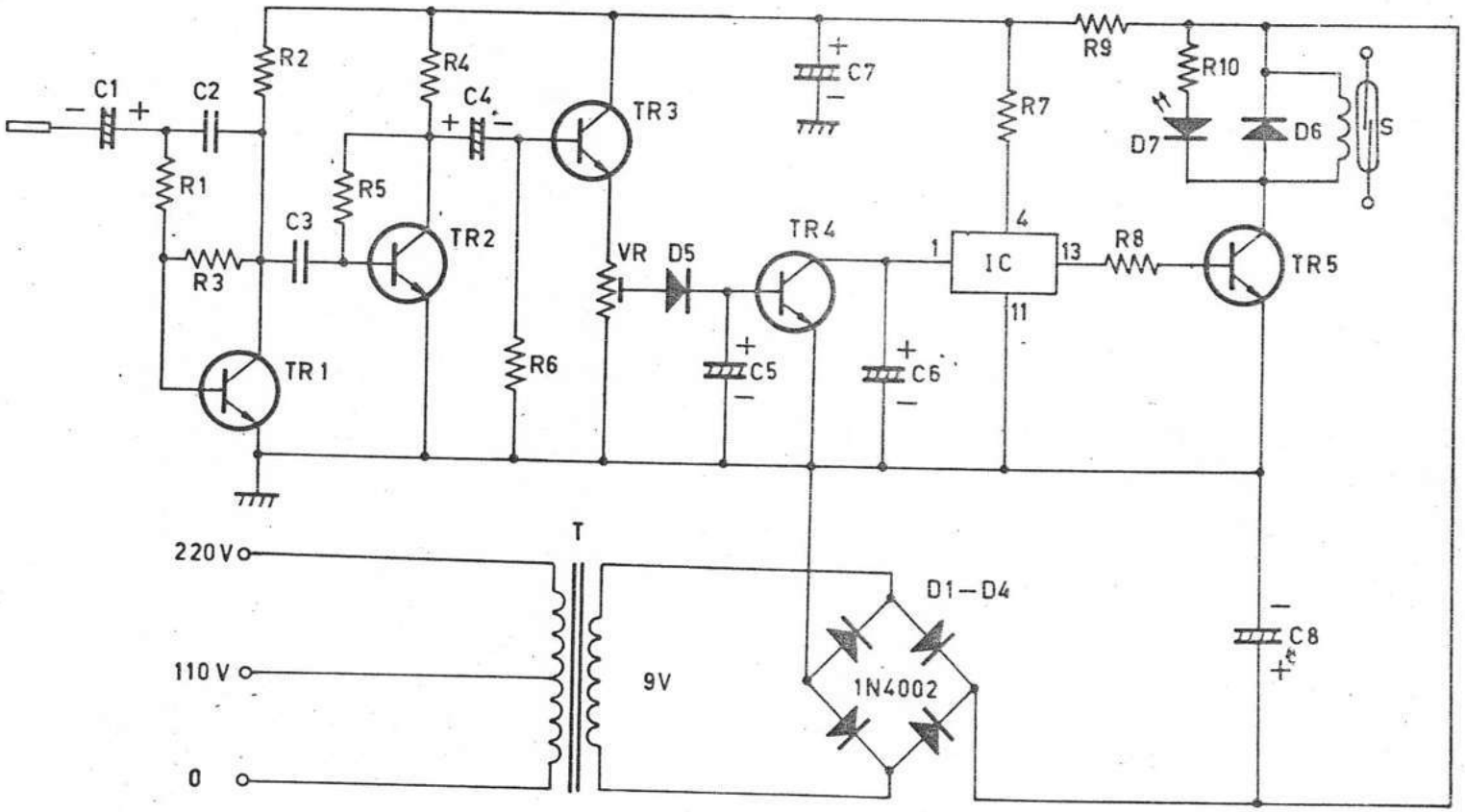

TL-200

CIRCUIT DIAGRAM

TL-207A

PARTS LIST

R.1.3	1M
R.2.4	15K
R.5	100K
R.6	10K
R.7	220K
R.8	1,5K
R.9	270
R.10	220
VR.1.2	2K
C.1.3.8	0.1uF
C.2	1uF
C.4	47uF
C.5	10uF
C.6	220uF
C.7	33uF
C.9	100uF
TR.1.2.3.4	FCS9014
TR.5.6	FCS9013
TR.7	2N 4355
D.1.2	1N 4148
T	P:5K S:200
Loudspeaker	8Ohm

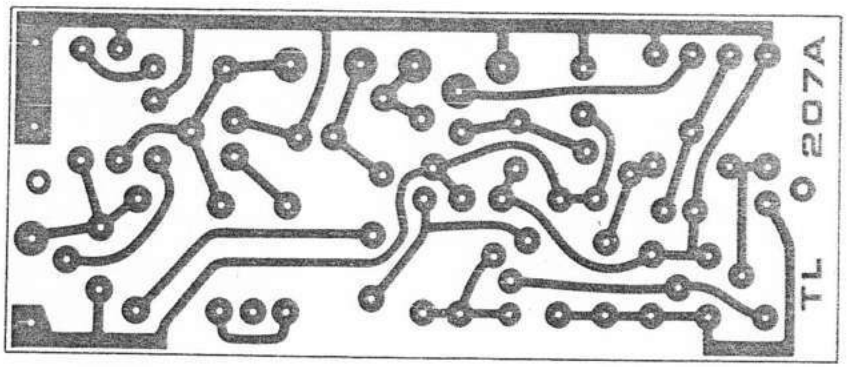

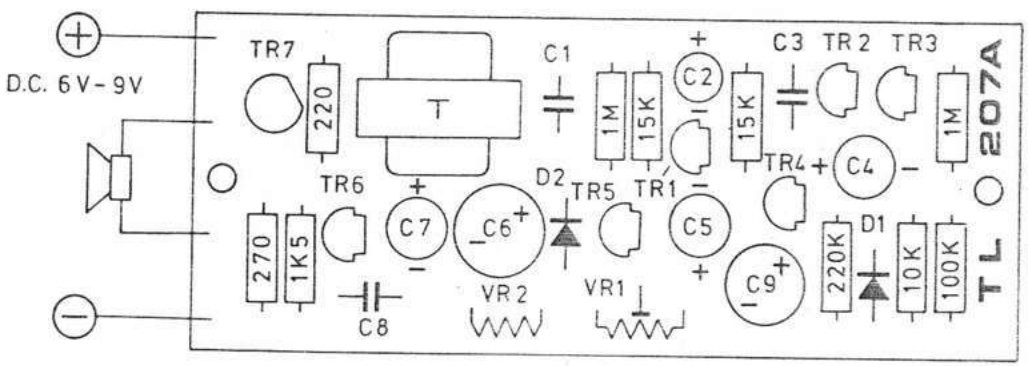

SOUND ACTIVATED ELECTRONIC CHIRPING BIRD

BURUNG PUK-NYI

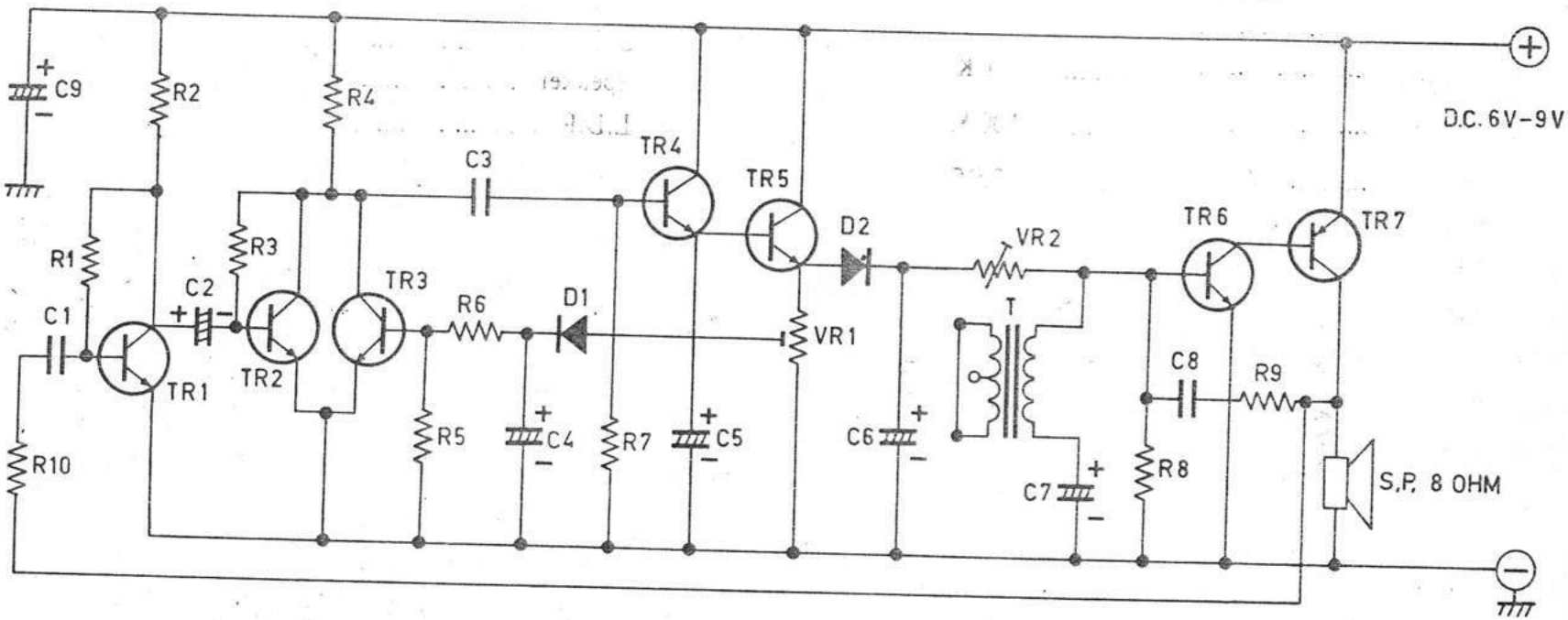

TL-207A

CIRCUIT DIAGRAM

LIGHT CONTROL ALARM

R.1	47K
R.2	330
R.3	150
R.4.5	5.6K
R.6	1 K
V.R.	100 K
C.1	0.05
C.2	220uF/10V
TR.1.3	FCS 9014D
TR.2	FCS 9012H
S.C.R.	EC103D
Speaker	8 Ohm/2"
L.D.R.	CdS-05

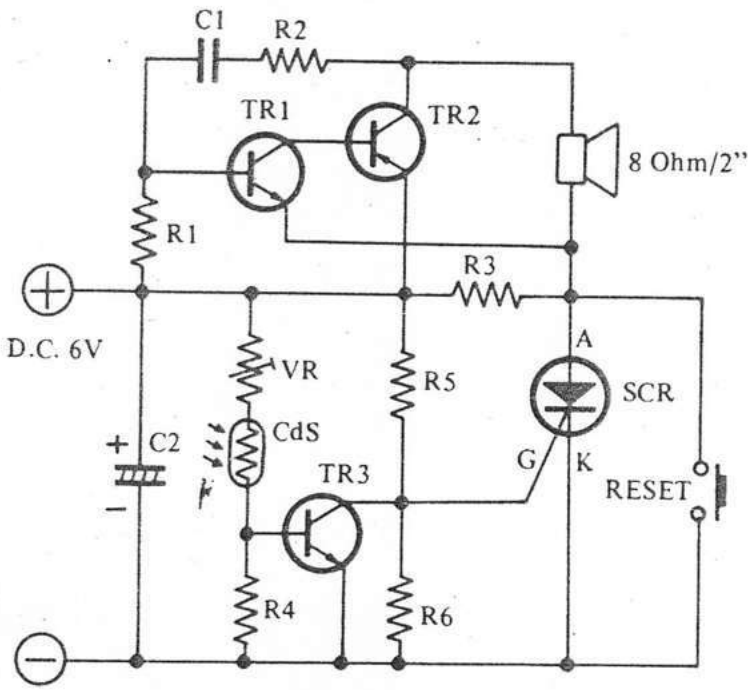

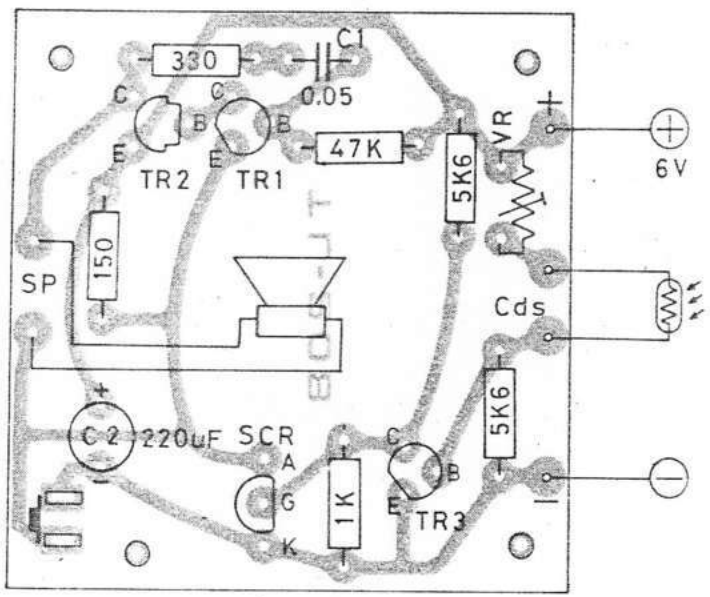

TL-208

ANTI THEFT ULTRASONIC SWITCH

(TRANSMITTER)

R. 12K
VR 10K
C.1 ..... 1KpF
C.2 ..... 10uF
D 1N 4002
IC . ..... MC 1455
SCS–401.... 40kHz Ultrasonic Transducer

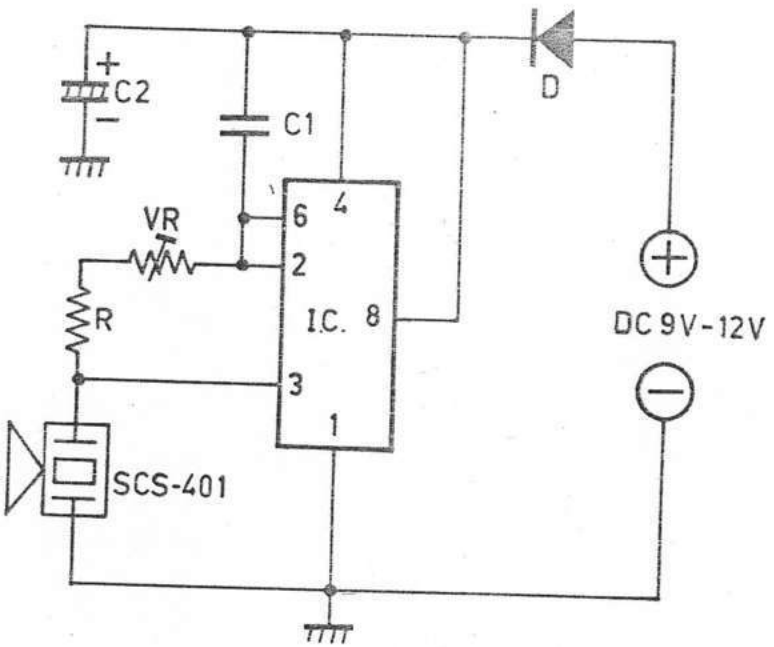

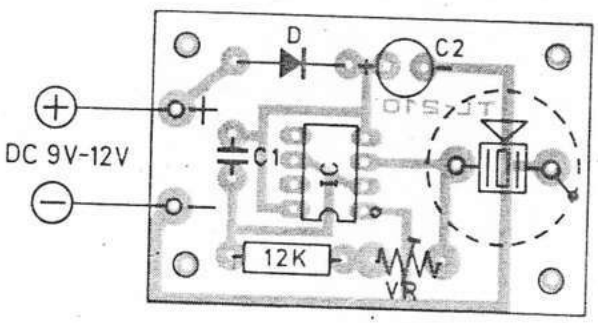

TL-210

TL-210A

PARTS LIST

R.1	100K
R.2.8	10K
R.3	100
R.4	3K9
R.5	680
R.6	2K2
R.7	1K
VR	10K
C.1	1uF/10V
C.2.3	10KpF/25V
C.4	220uF/10V
C.5	10uF/10V
C.6	47uF/16V
D.1.2.3.6	1N 4148
D.4	ZD 7,5V
D.5	1N 4002
TR	4X ..FCS 9014
Relay	6V–100 Ohm

SCM–401..40kHz Ultrasonic Transducer

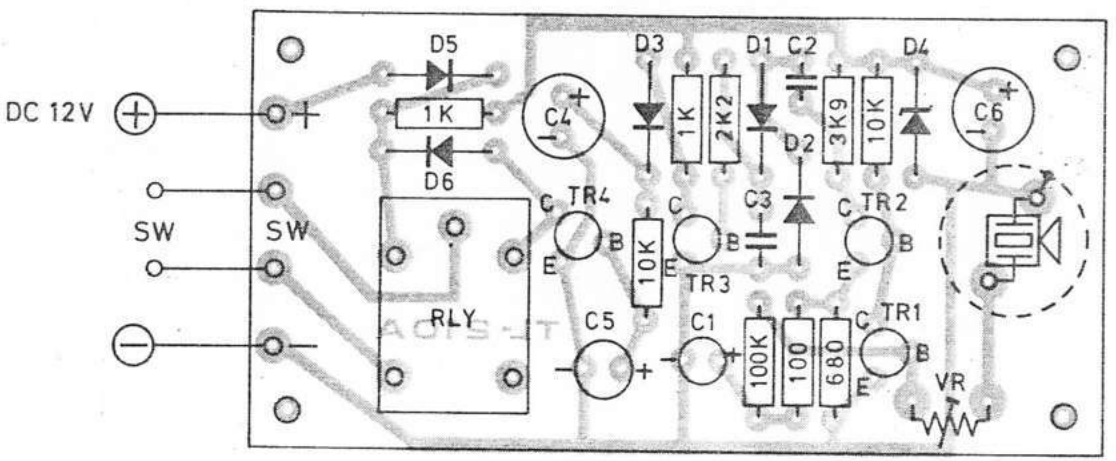

ANTI THEFT ULTRASONIC SWITCH

(RECEIVER)

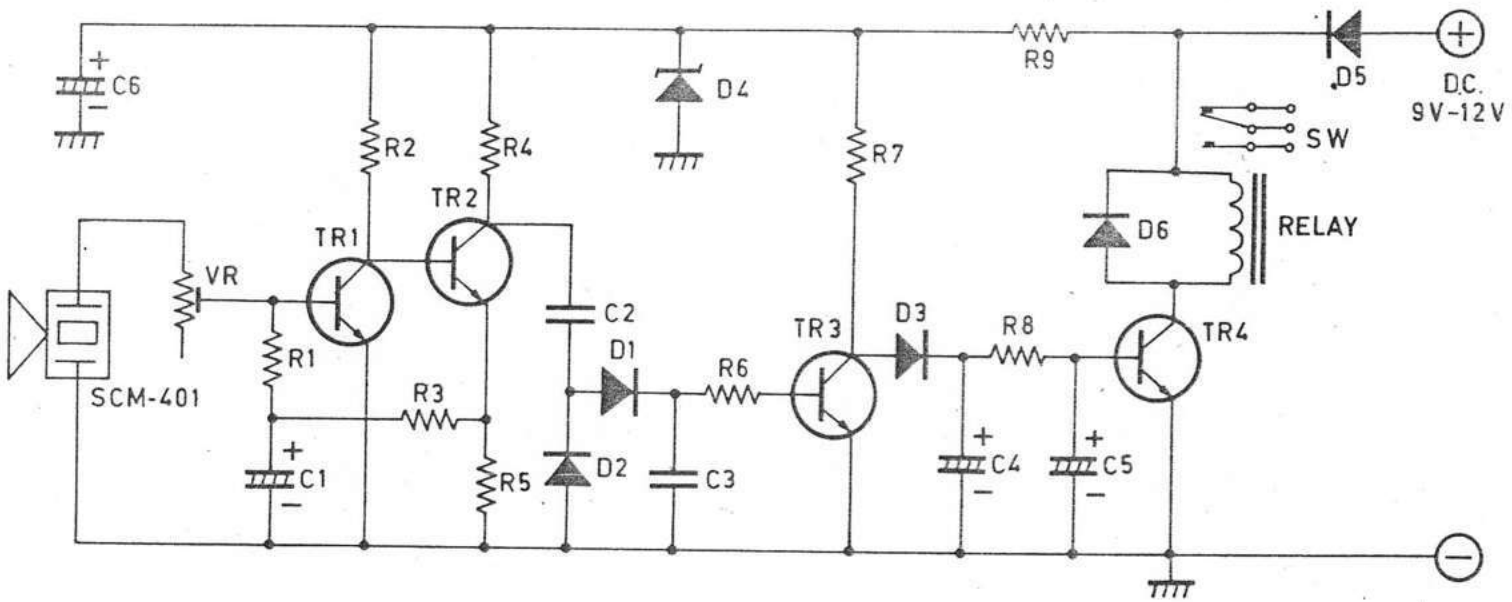

TL-210A

CIRCUIT DIAGRAM

TL-220A

PARTS LIST

R.1	8K2
R.2	15K
R.3	1K
R.4	680
R.5.6.7	110V——100K / 220V——180K
R.8.9.10	82K
VR.	220K

C.1	220uF/16V
C.2	0,005uF/600V
TR.1.2	FCS 9014
SPD	MEL 11/MEL 12
D.1.2	1N 4002
D.3	S–04
SCR	T–103

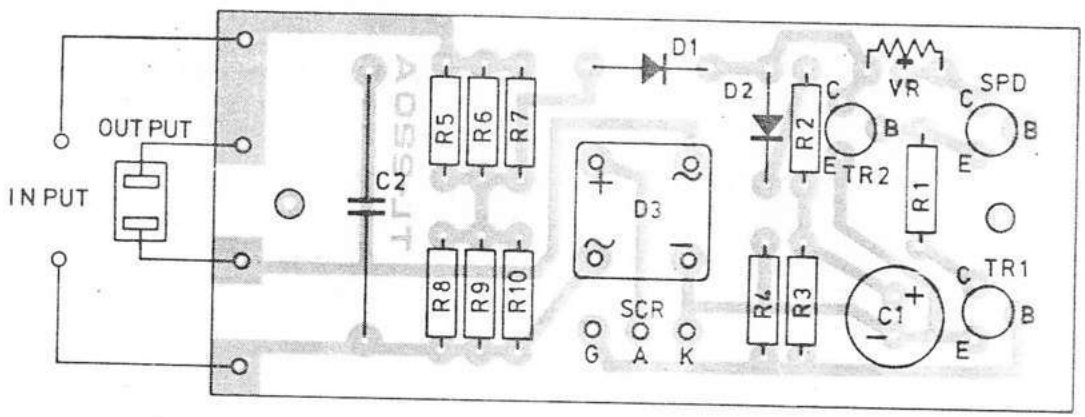

LIGHT CONTROL SWITCH

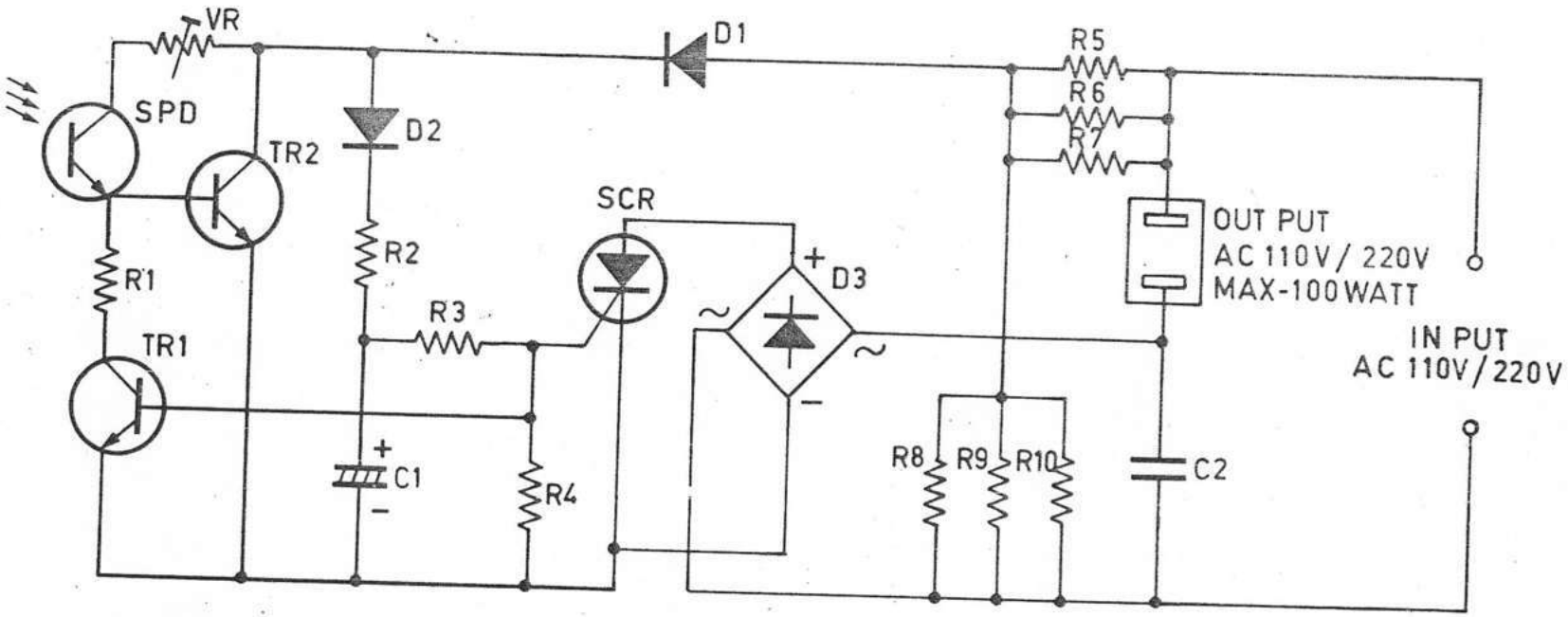

TL-220A

CIRCUIT DIAGRAM

TL-301

PARTS LIST

R.1.2	100
R.3.5.7.9.11.13.15	5K6
R.4.6.8.10.12.14.16	150
VR	1K
C.1.2	220 uF
D.1.2	1N 4002
D.3.4.5.6.7.8.9	1N 4148
D.10.11.12.13.14.15.16	LED
TR.	7x FCS 9014

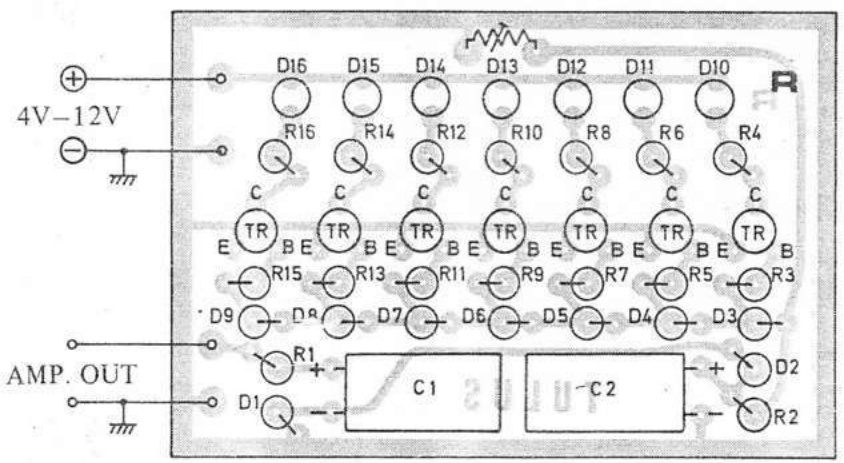

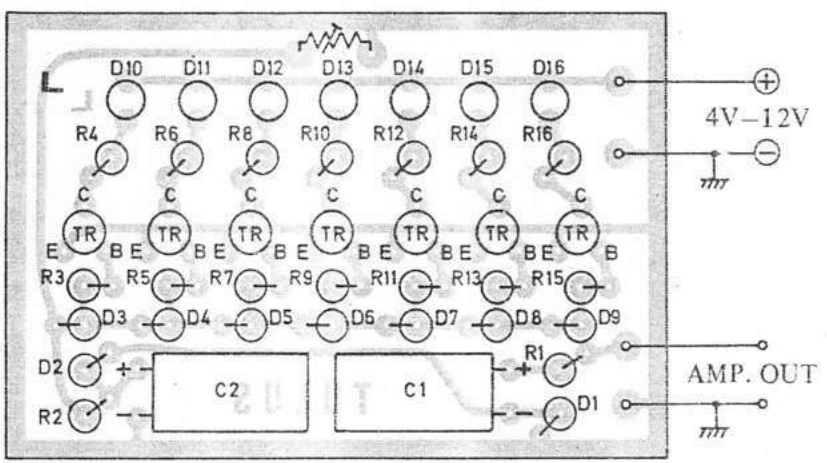

LED VU DISPLAY

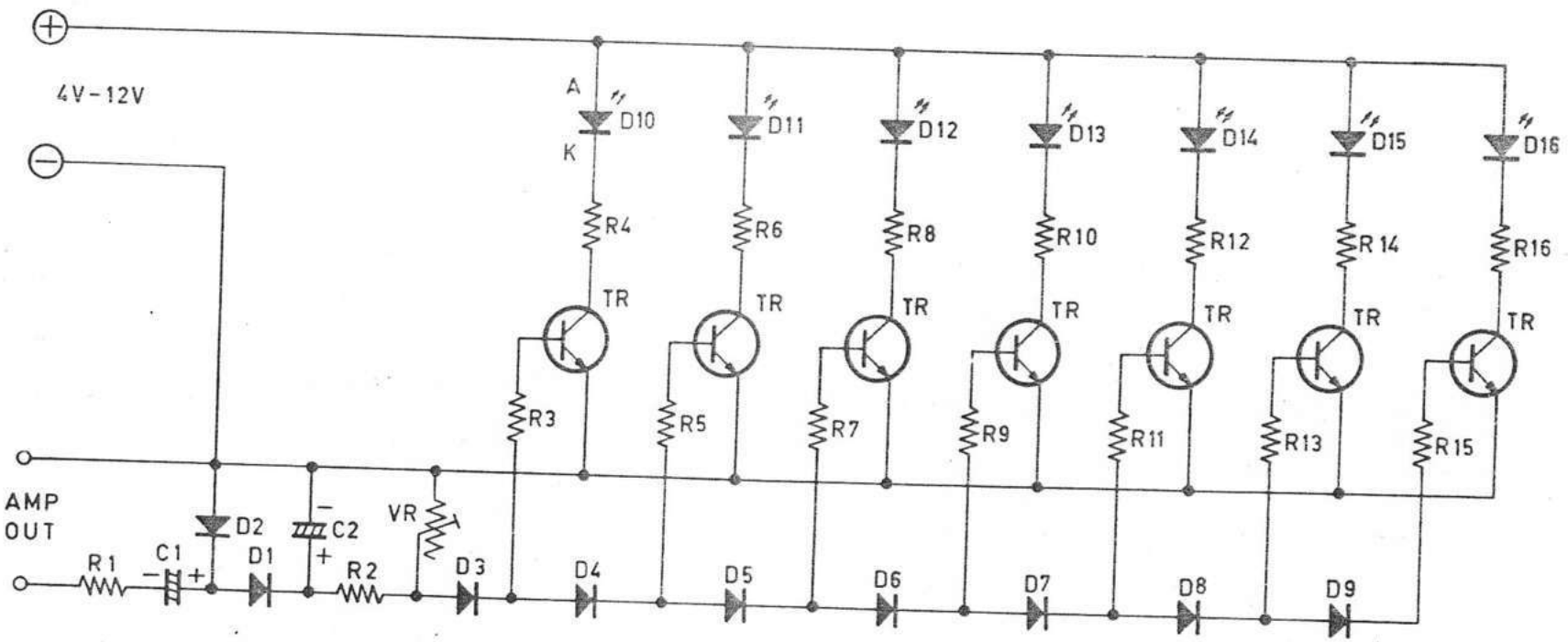

TL-301

CIRCUIT DIAGRAM

TL-302

PARTS LIST

R.1	5
R.2	47
R.3	330
R.4.8.12.16.20.24	4K7
R.5.9.13.17.21.25	47K
R.6.10.14.18.22.26	150
R.7.11.15.19.23.27	5K6
VR.	1 K
C.1.2	220 uF
D.1.2	1N 4002
D.1.4.5.6.7.8.9.10	1N 4148
D.11.12.13.14.15.16.17	LED
TR.	13xFCS9014

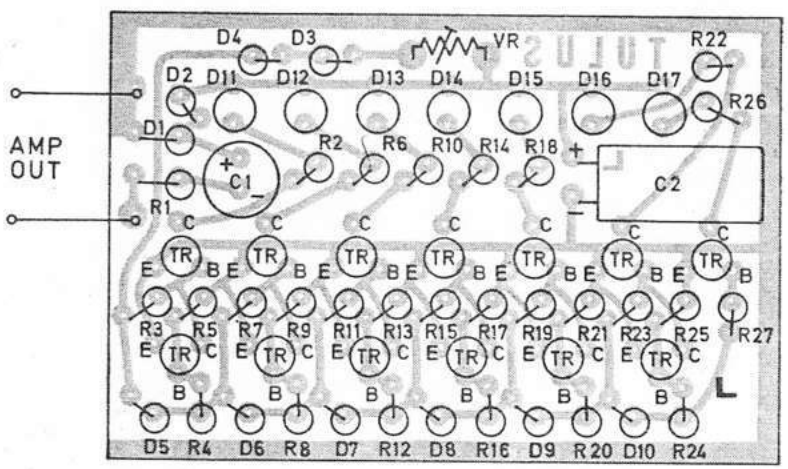

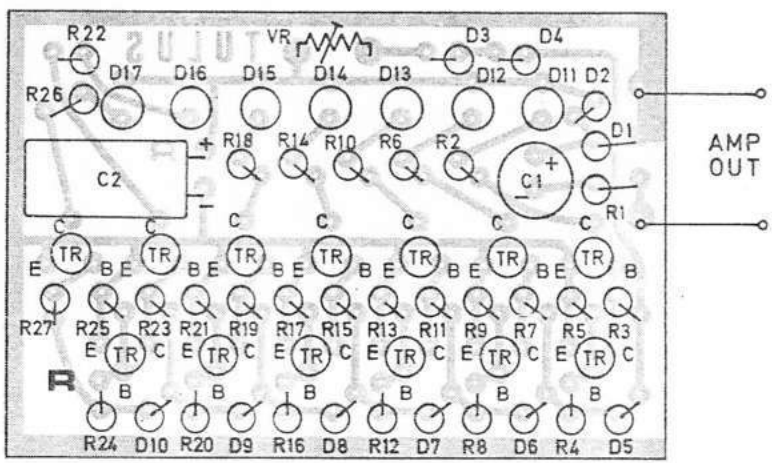

LED VU DISPLAY

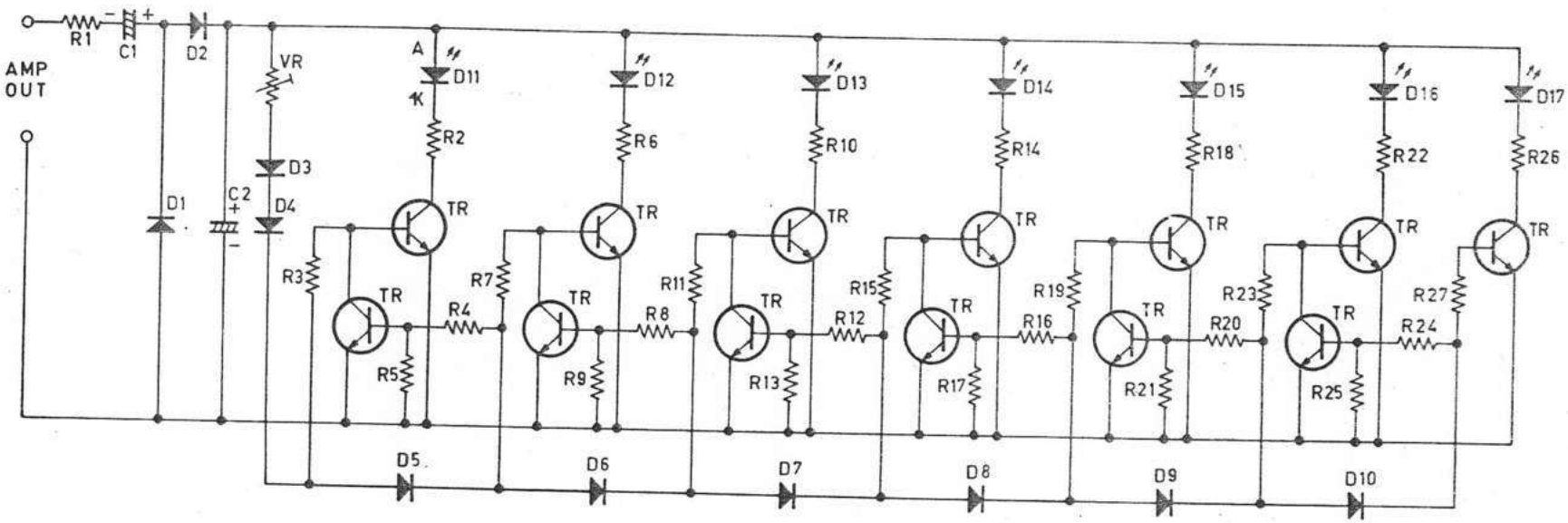

TL-302

CIRCUIT DIAGRAM

TL-303

PARTS LIST

R.1	1
R.2	390
R.3	330
R.4	220
R.5	150
R.6	82
R.7	33
C.1.2	220 μF
D.1.2.3.4.5.6	IN 4002
D.7.8.9.10.11.12	IN 4148
D.13-18	LED DISPLAY

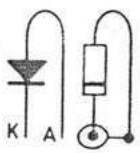

DIODE

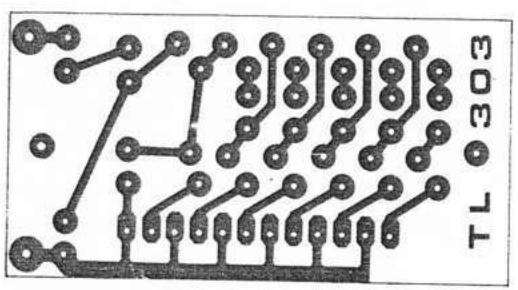

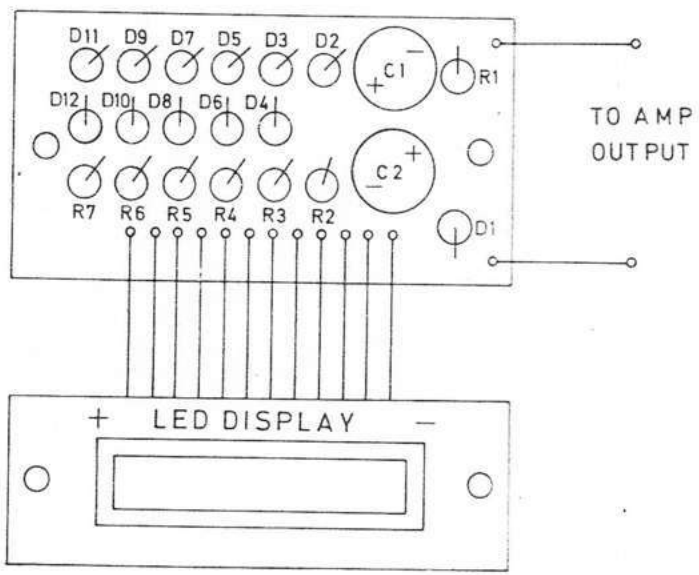

LED VU DISPLAY

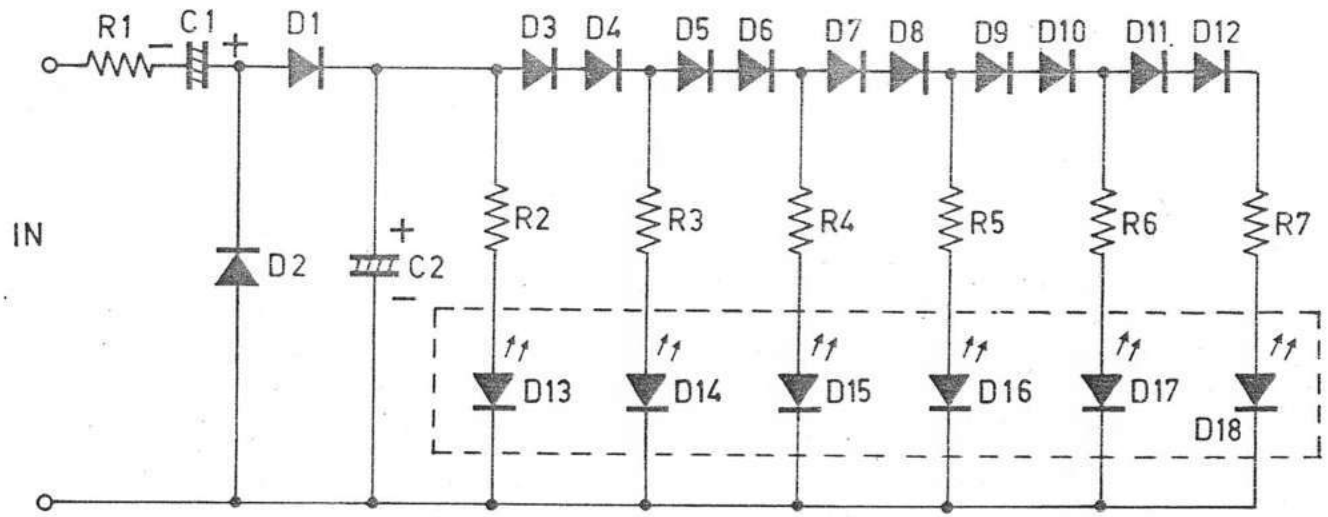

TL-303

CIRCUIT DIAGRAM

TL-304

PARTS LIST

R.1	1 K
R.2	1 M
R.3	15K
R.4	220K
R.5	33K
R.6	470
R.7	330
R.8	220
R.9	150
R.10	100
R.11	56
R.12	33
VR	50K

C.1.2.3	2.2uF
C.4	100uF
D.1-5	1N 4148

D.6-11	LED DISPLAY
TR.1.2	FCS 9014
TR.3	FCS 9015

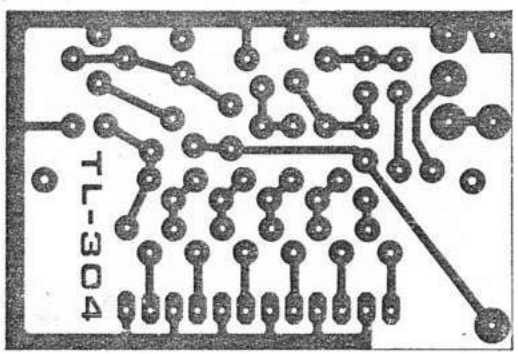

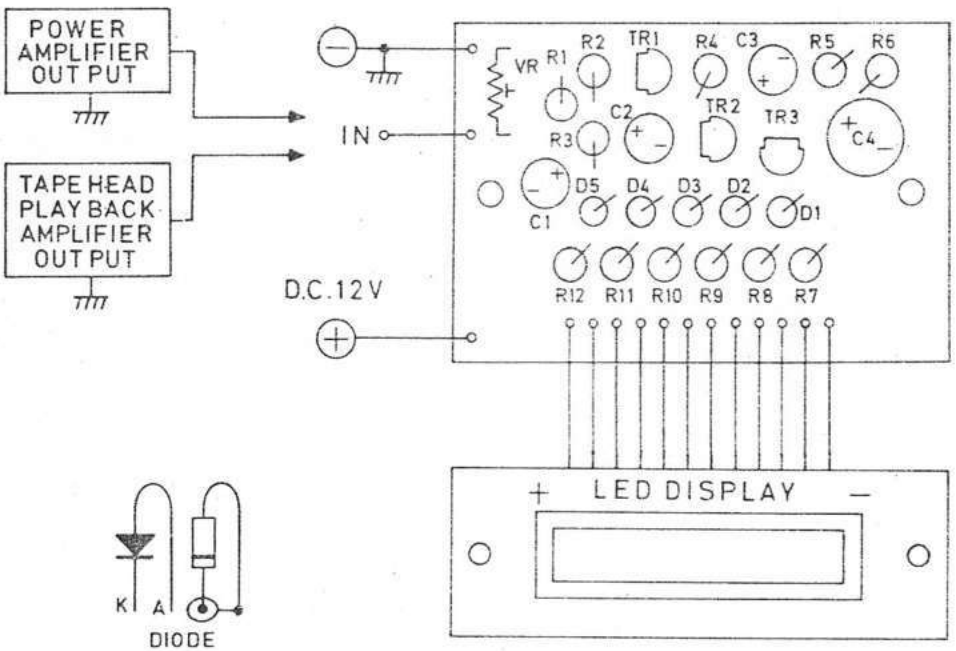

LED VU DISPLAY

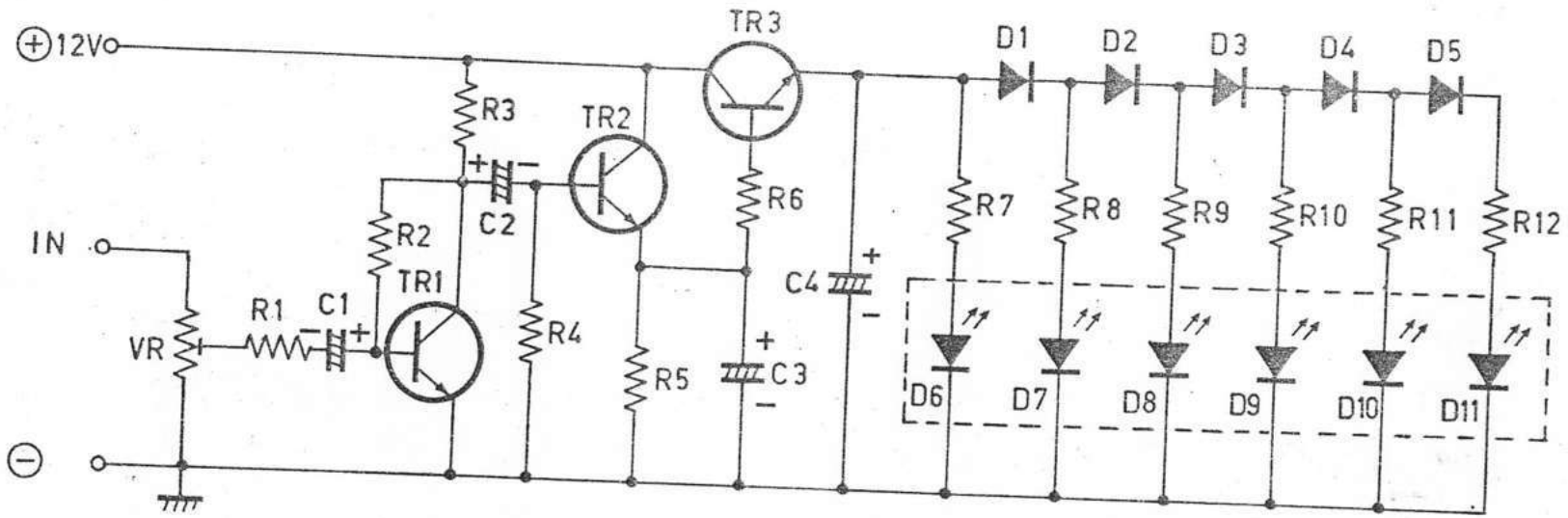

TL-304

CIRCUIT DIAGRAM

TL-305

PARTS LIST

R.1	33K
R.2	15K
R.3	220K
R.4	180K
R.5	1K
VR.	22K
C.1.2.3	2.2 uF
TR.1.2	FCS 9014

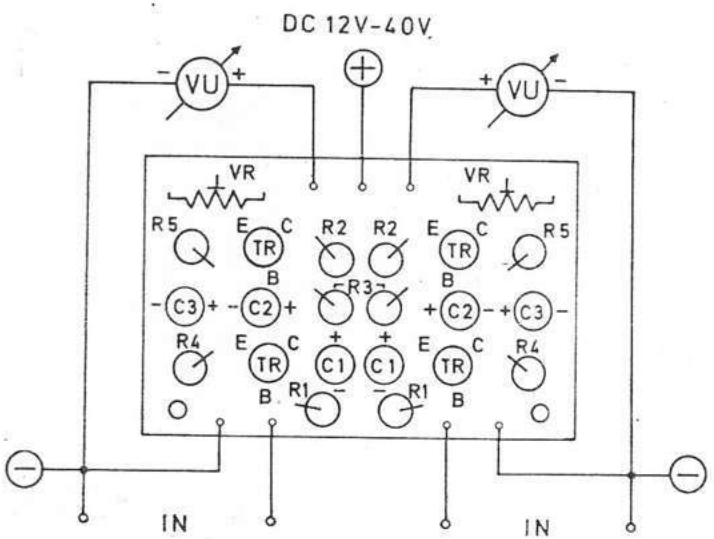

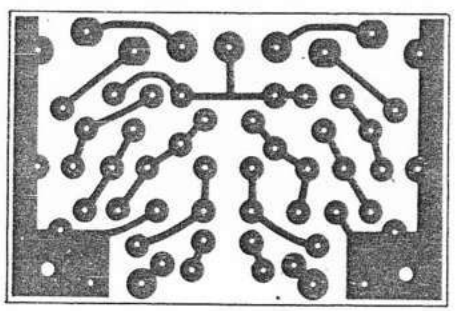

STEREO VU BOOSTER

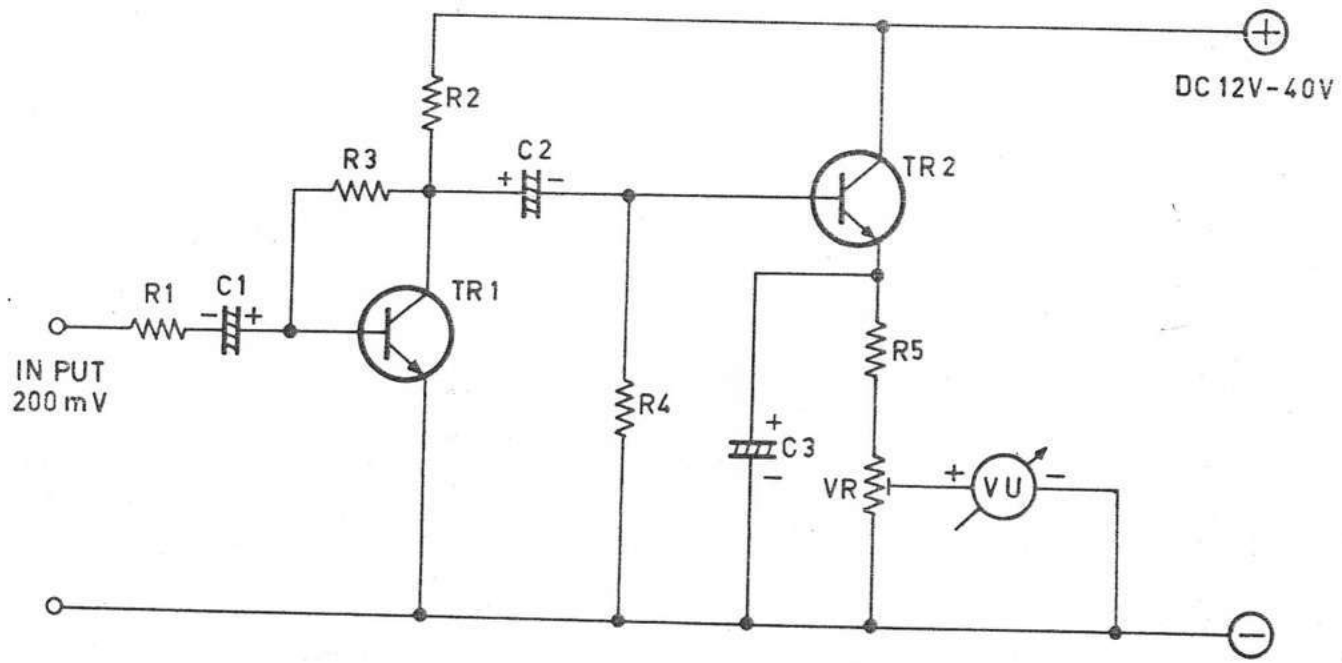

TL-305

CIRCUIT DIAGRAM

He 108.

TL-501

PARTS LIST

R.1	470
R.2.3.4.7	1 K
R.5.6	47K
R.8	220
VR	5K
C.	100μF/25V

D.1.2	1N 4148
D.3	L.E.D.
D.4	ZD 6,2V
D.5.6.7.8	1N 4002
D.9	MDA 3502-4
SCR.1.2.3	EC 103D
SCR.4	2N 4443

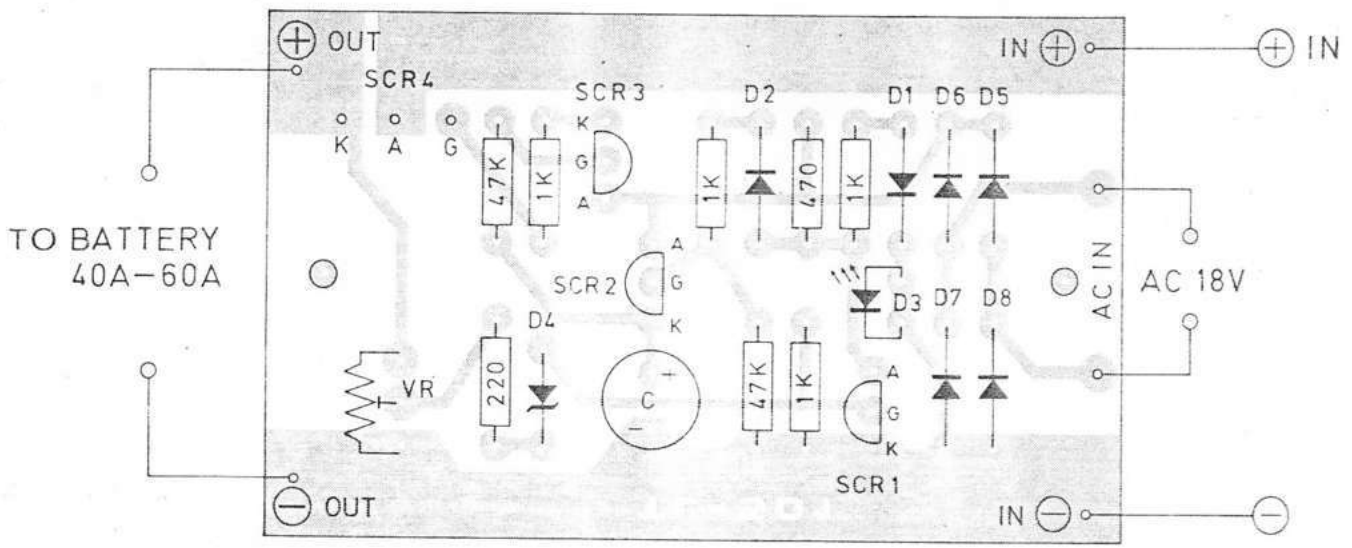

AUTOMATIC BATTERY CHARGER

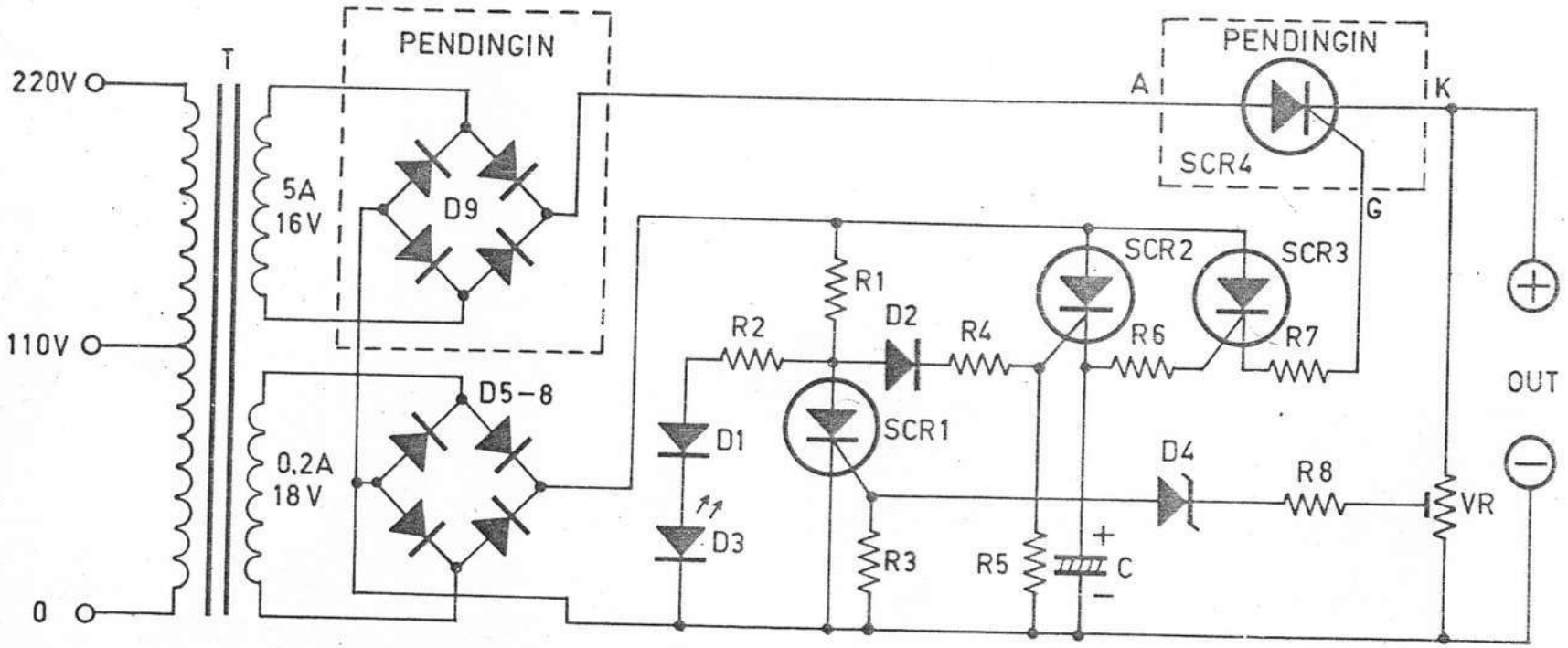

TL-501

CIRCUIT DIAGRAM

TL-502

PARTS LIST

R.1.4.7	1K
R.2	470
R.3.5	47 K
R.6	220
R.8	1
V.R.	5K
C	220uF/16V

D.1	1N 5402
D.2.4	1N 4148
D.3	L.E.D.
D.5	ZD 6,2V
SCR.1.2.3	EC 103D
SCR.4	C 10
T.	P: 0-110V/220V S: 16V-1A

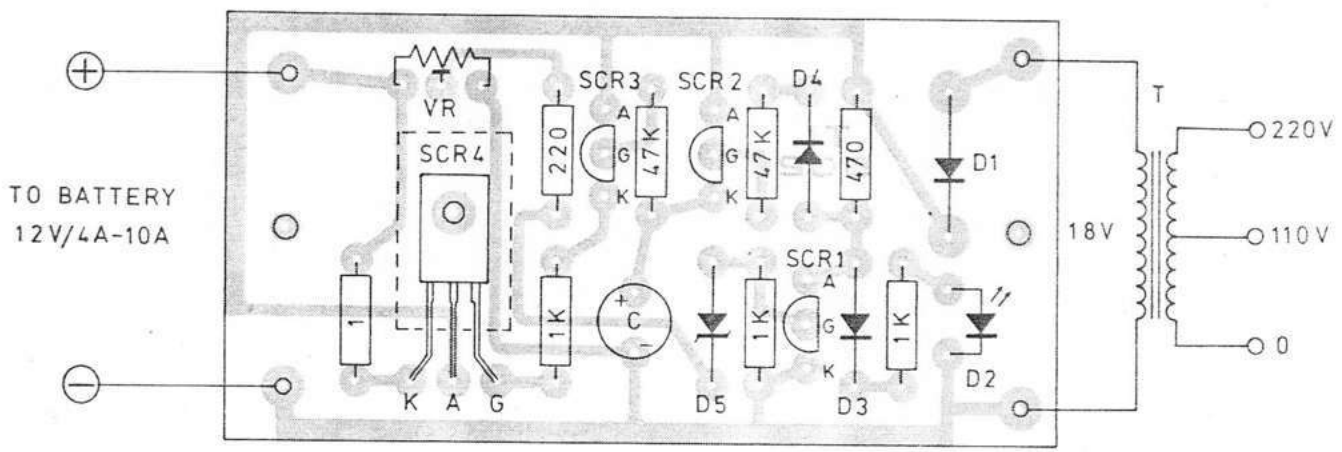

AUTOMATIC BATTERY CHARGER

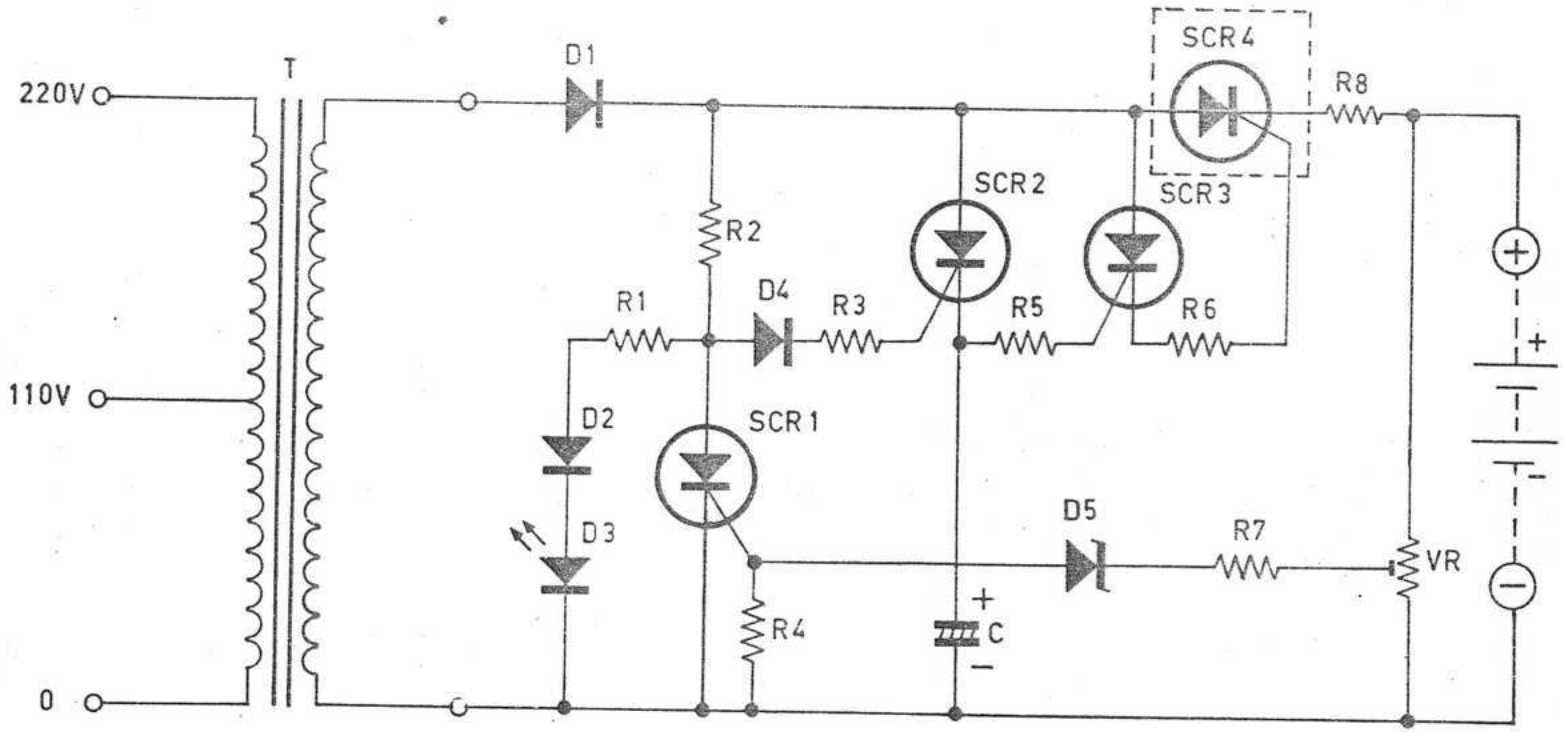

TL-502

CIRCUIT DIAGRAM

TL-503

PARTS LIST

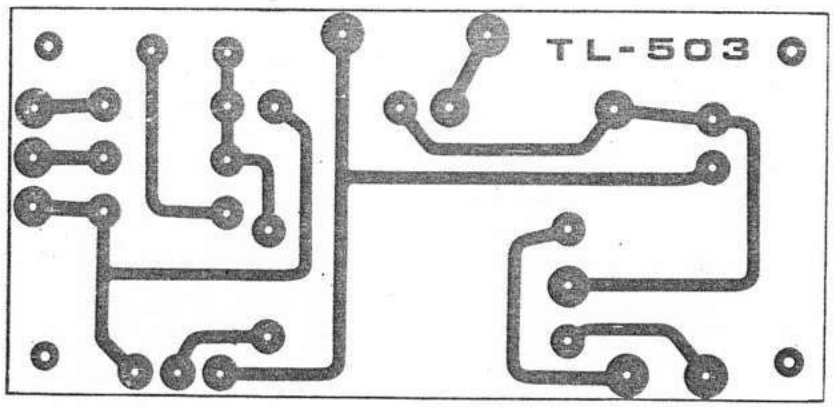

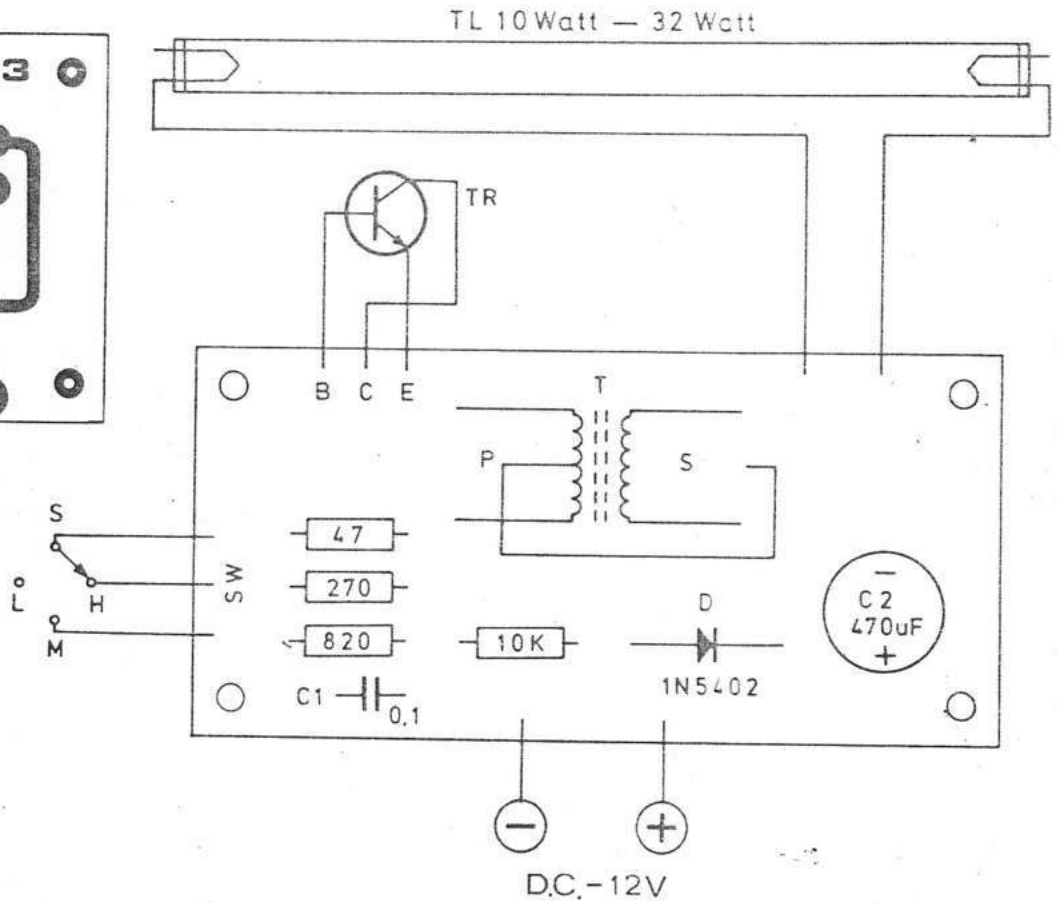

R.1	10K
R.2	47
R.3	270
R.4	820
C.1	0,1uF/100V
C.2	470uF/16V
D	1N 5402
TR	C 1061
T	T-20

DC FLUORESCENT LAMP CONVERTER

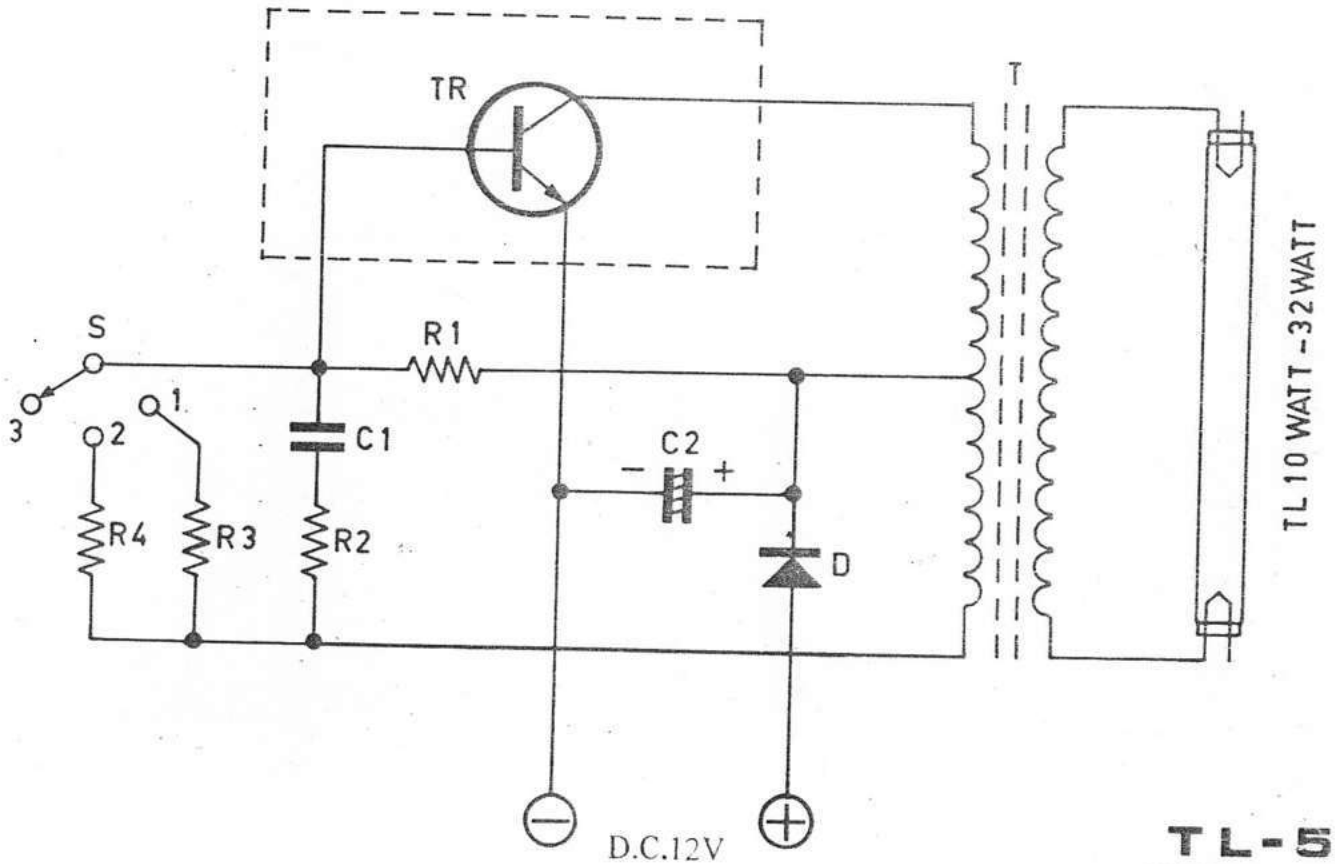

TL-503

CIRCUIT DIAGRAM

TL-504

PARTS LIST

R.1.2.3.4	330
R.5.6	560
C.1	0,047uF
C.2	470uF/16V
TR	MJ 4502
T	T-40

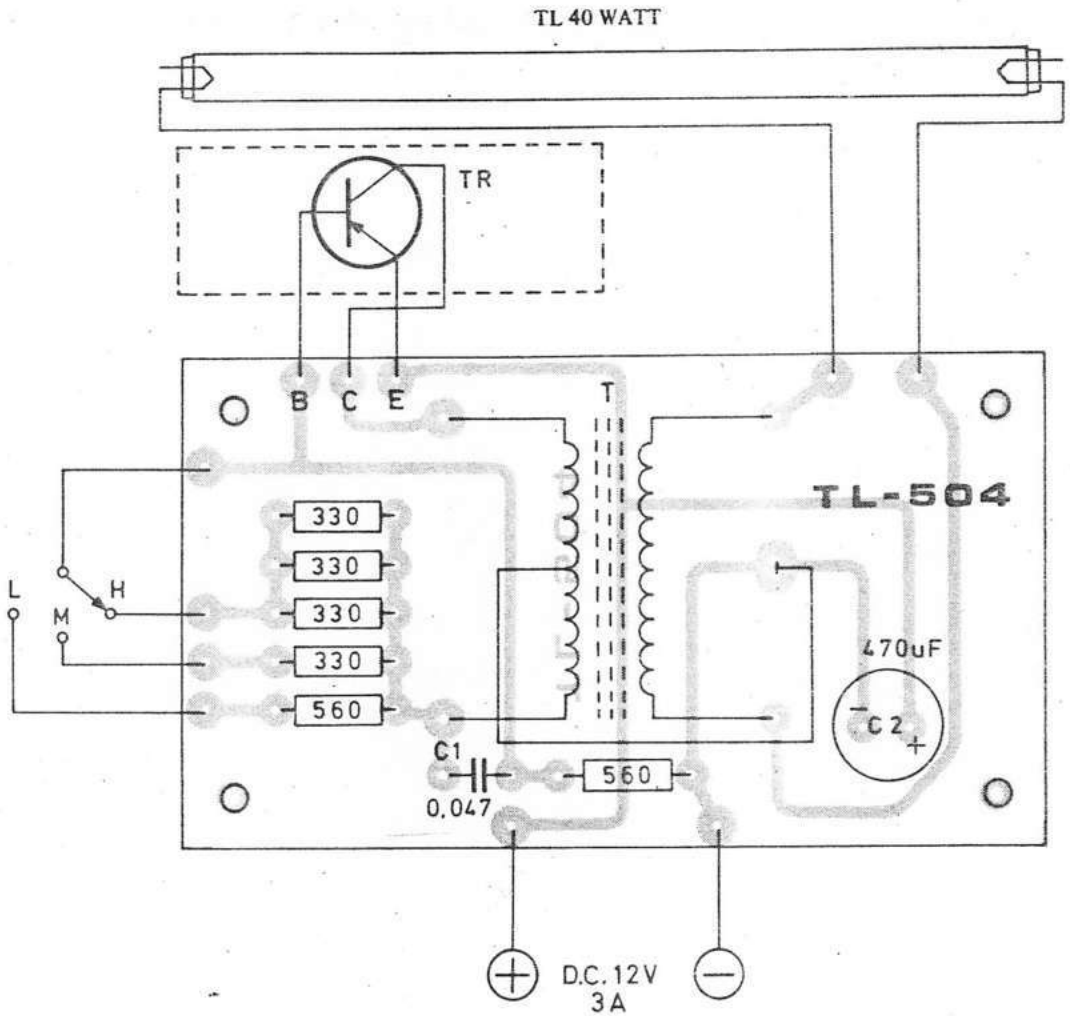

40 WATT DC FLUORESCENT LAMP CONVERTER

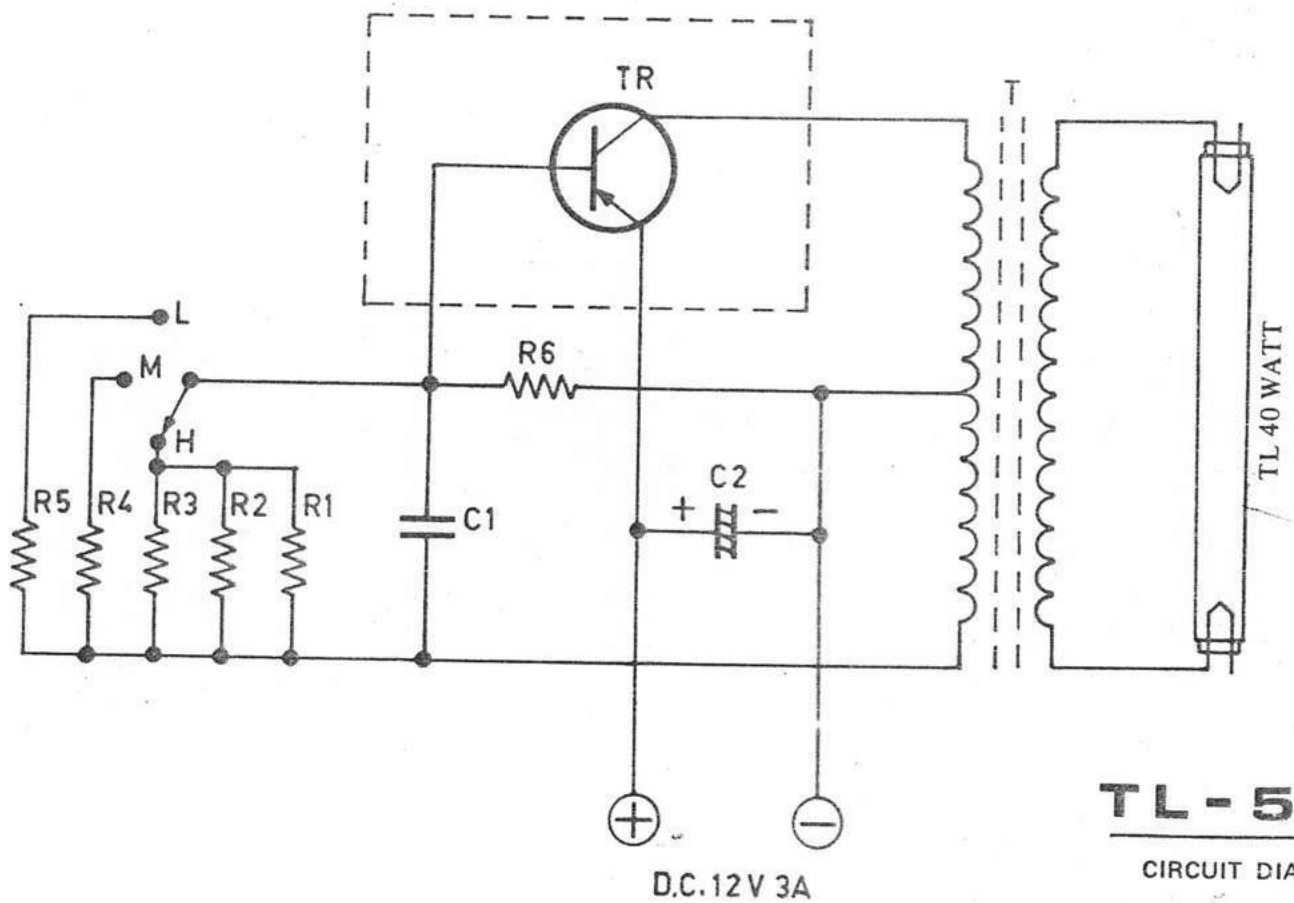

TL-504

CIRCUIT DIAGRAM

TL-505

PARTS LIST

R.1.2.4.7	1K
R.3	470
R.5	220K
R.6	47K
R.8	220
R.9	1
R.10	180
R.11	820
R.12	270
R.13	47
R.14	10K
V.R.	5K
C.1	220uF/16V
C.2	100uF/25V
C.3	470uF/16V
C.4	0,1uF/100V
TR	C 1061
SCR.1.2.3	EC 103D
SCR.4	C 10
D.1	1N 5402
D.2.4.7	1N 4148
D.3	L.E.D.
D.5	1N 4002
D.6	ZD 6,2V
T.1	P: 0-110V/220V S: 16V - 1A
T.2	T-20

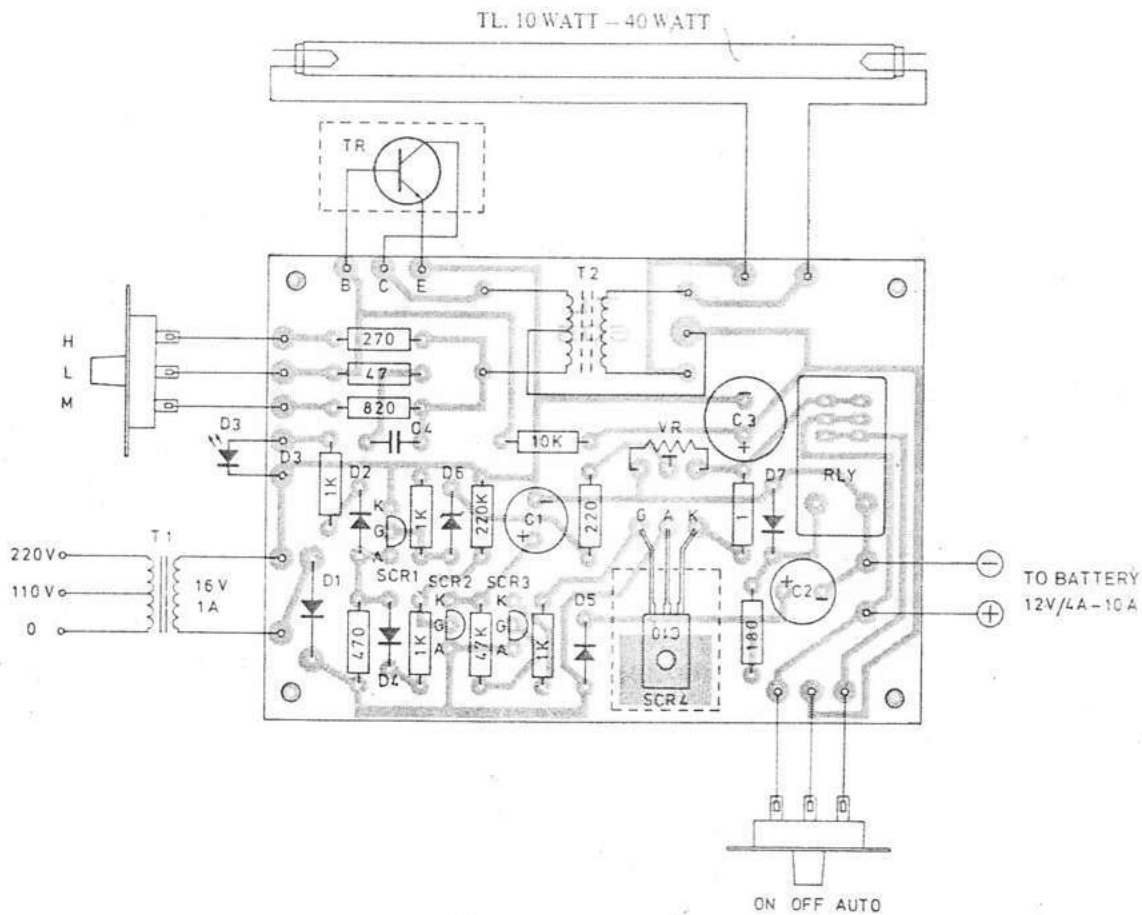

EMERGENCY LIGHT
(LAMPU DARURAT)

* AUTOMATIC BATTERY CHARGER
* DC FLUORESCENT LAMP CONVERTER

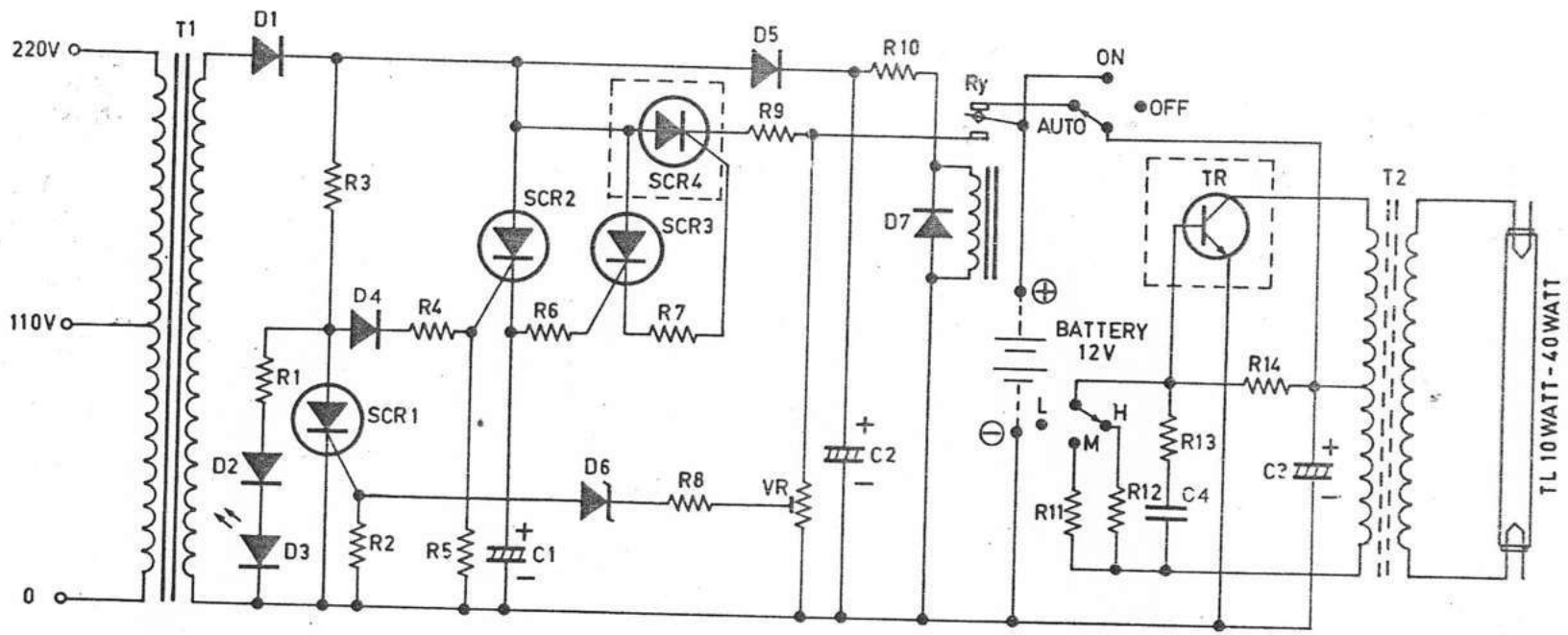

TL-505

CIRCUIT DIAGRAM

TL-999

PARTS LIST

R.1	4K7
R.2	10K
R.3	100K
R.4.11	12K
R.5	2K2
R.6	220K
R.7	22K
R.8	82K
R.9	1M5
R.10	100
VR	100K
C.1	47uF/10V
C.2	2.2uF/10V
C.3.4.5	0.1uF/50V
C.6	22uF/10V
C.7	470uF/10V
C.8	100uF/25V
TR.1.3	2N 2646
TR.2.4.5	BC 109
TR.6.7	2SB 178
TR.8	2SB 337
D.1	1N 5402
D.2	1N 4002
IC	LM 380

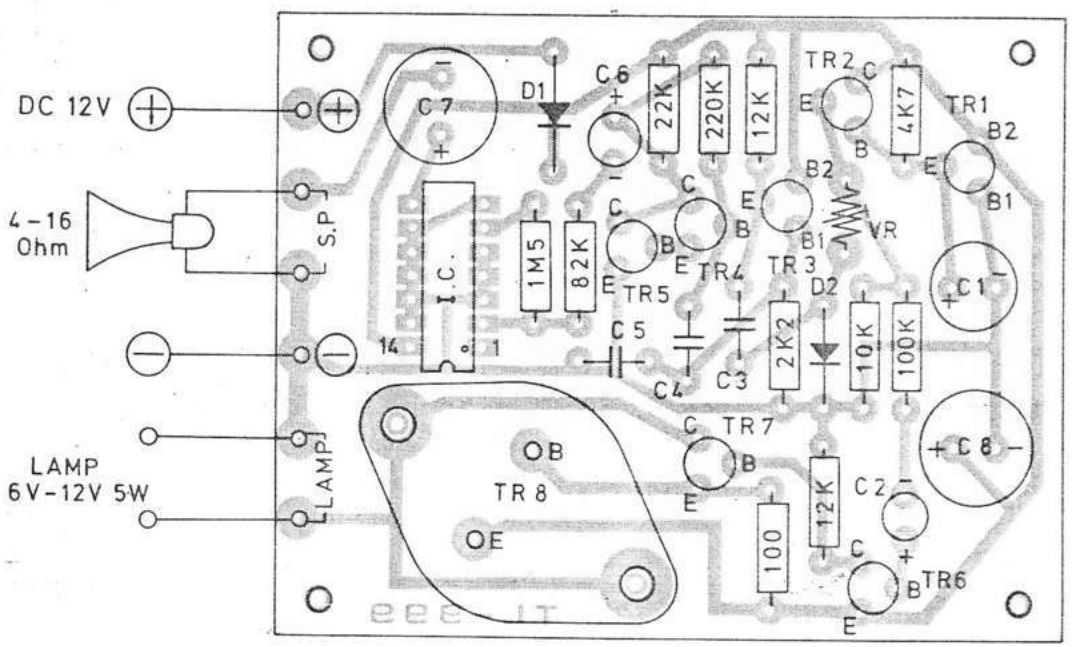

POLICE ALARM

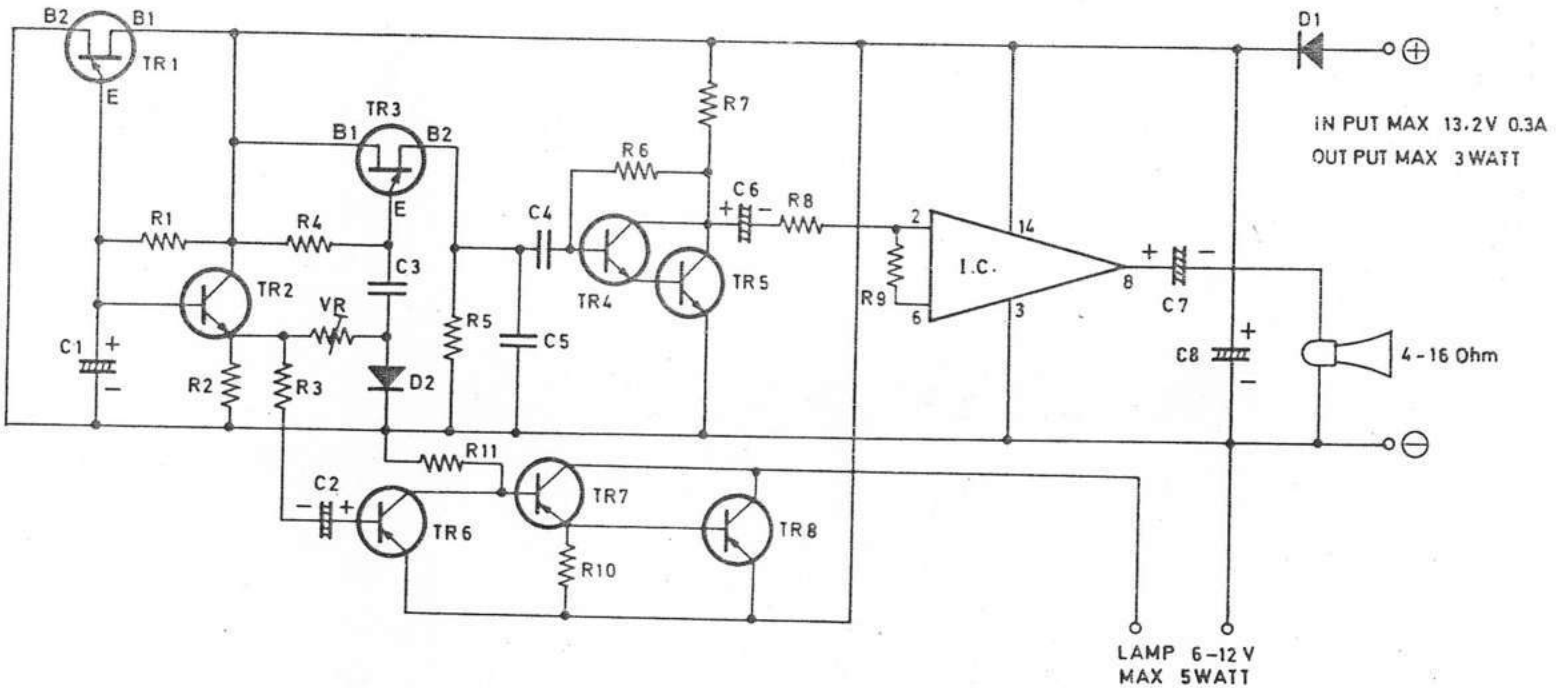

TL-999

CIRCUIT DIAGRAM

TL-999A

PARTS LIST

R.1	2K2	R.12.13	18K	C.6	2,2uF/16V
R.2	27K	R.14	10	C.7	500pF/25V
R.3	470	VR.1	100K	C.8	0,05uF/50V
R.4	22K	VR.2.3	2K	C.9	100uF/25V
R.5	120	C.1	22uF/10V	TR.1.3	FCS 9013
R.6.10	8K2	C2.	1 uF/35V	TR.2	FCS 9012
R.7	3K3	C.3	0,047uF/50V	TR.4	2N 2646
R.8	1 K	C.4	0,1 uF/50V	IC	LM 380
R.9	4K7	C.5	0,22uF/50V	D.1.2.3	1N 4002
R.11	220				

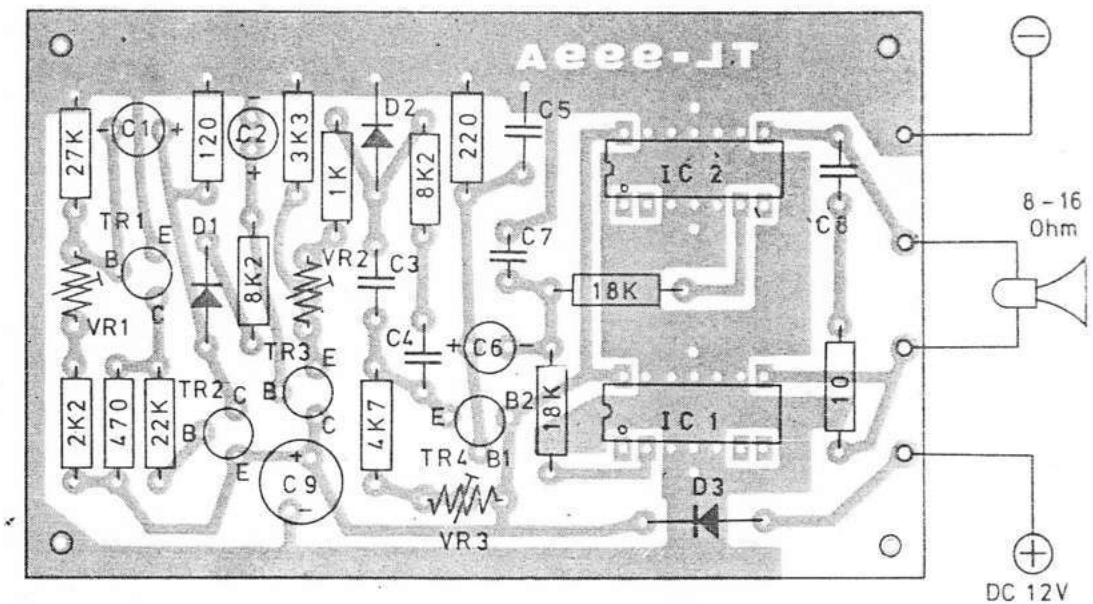

POLICE ALARM

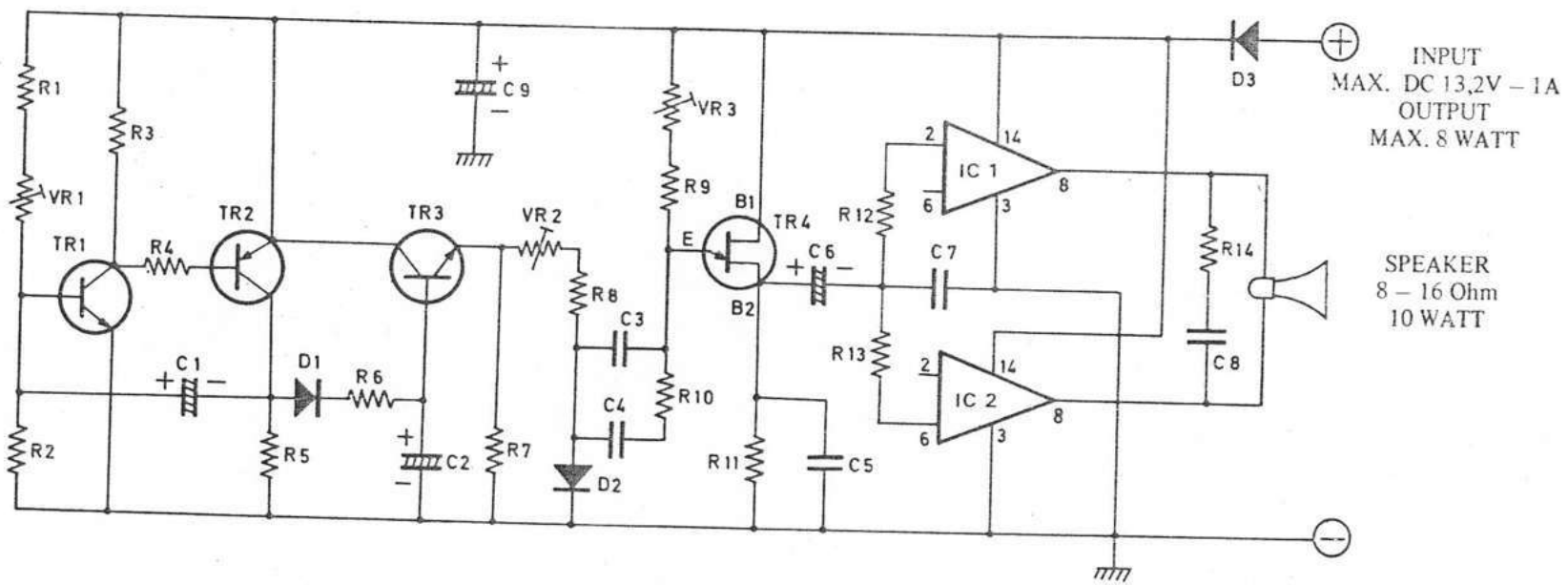

TL-999A

CIRCUIT DIAGRAM

TL-999M

PARTS LIST

R.1.4	180
R.2.3	15K
R.5	3K3
R.6	10K
R.7	220K
R.8	1K2
R.9	150
C.1.2.3	10uF
C.4	0,05uF
C.5	100uF
C.6	47uF
D.1.2	1N 4002
TR.1.2.3	FCS 9014
TR.4	FCS 9012
Speaker	8 Ohm

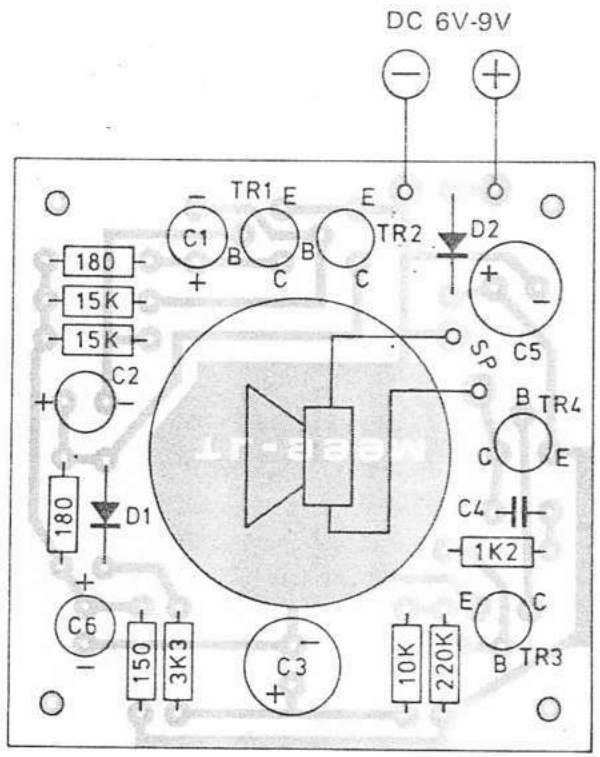

MINI POLICE ALARM

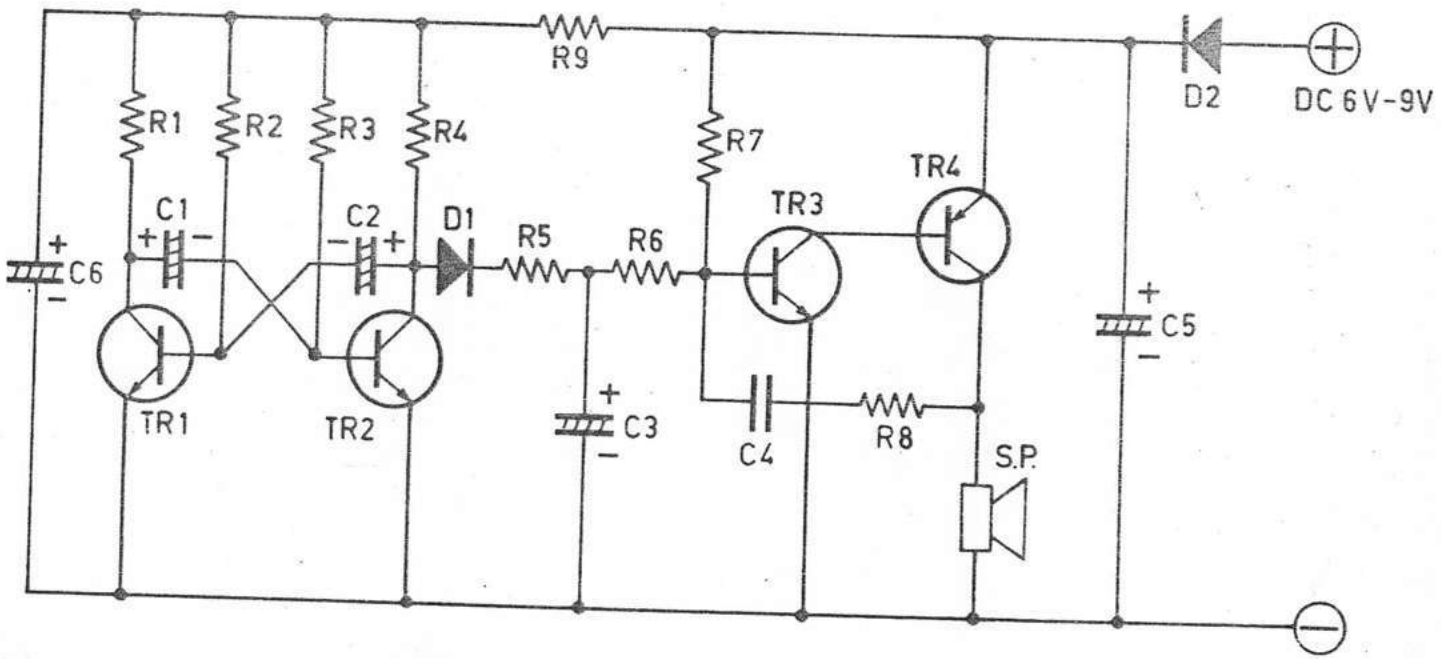

TL-999M

CIRCUIT DIAGRAM

TL-1005

PARTS LIST

R.1.3.5.7.9.11.13.15.17.19	470
R.101.103.105.107.109.111.113.115.117.119	470
R.2.4.6.8.10.12.14.16.18.20	470K
R.102.104.106.108.110.112.114.116.118.120	470K
R.21.121.22.122	100K
R.23.123.24.124	10K
R.25.125	1 K
R.26.126	1 M
R.27.127,28.128	330
R.29	3,9K
R.30	3,3K
R.31.32.33.34	1
R.35.36	100
VR...20X	B 20K – 100K
C.1.101.12.112	4,7KpF
C.2.102.22.122.24.124	150pF
C.3.103.14.114	10KpF
C.4.104	330pF
C.5.105.16.116	15KpF
C.6.106	470pF
C.7.107.18.118	33KpF
C.8.108	1 KpF
C.9.109	68KpF
C.10.110	2,2KpF
C.11.111.25.125.26.126.27.127.28.128	0,1μF
C.13.113	0,22μF
C.15.115	0,33μF
C.17.117.21.121	1μF
C.19.119	2,2μF
C.23.123	10μF
C20.120	47KpF
C.29.30	1000μF 25V
C.31.32	100 μF 25V
D.1.2.3.4	1N 4002
D.5	LED
I.C.	6X...TRX 6221
T-1005	Transformer. P:110V/220V. S:2X15V. 100mA

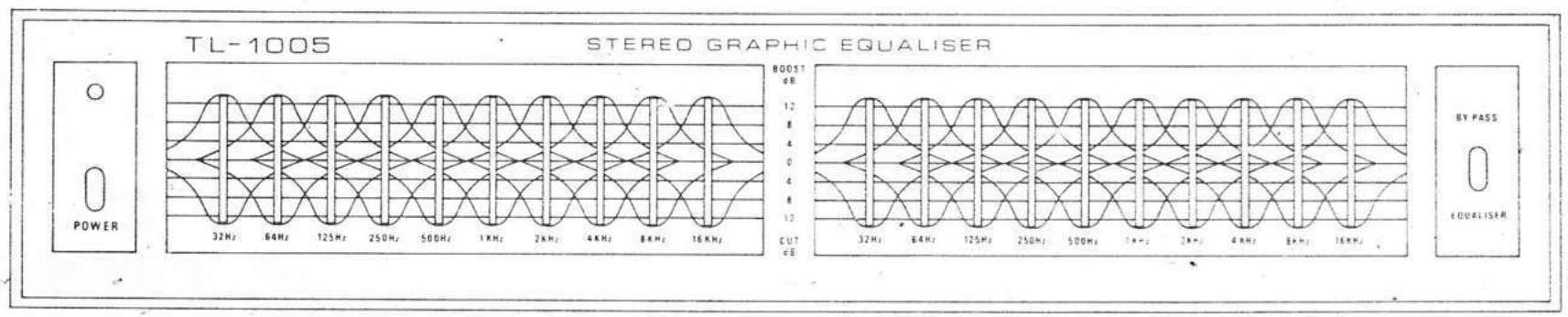

STEREO GRAPHIC EQUALISER

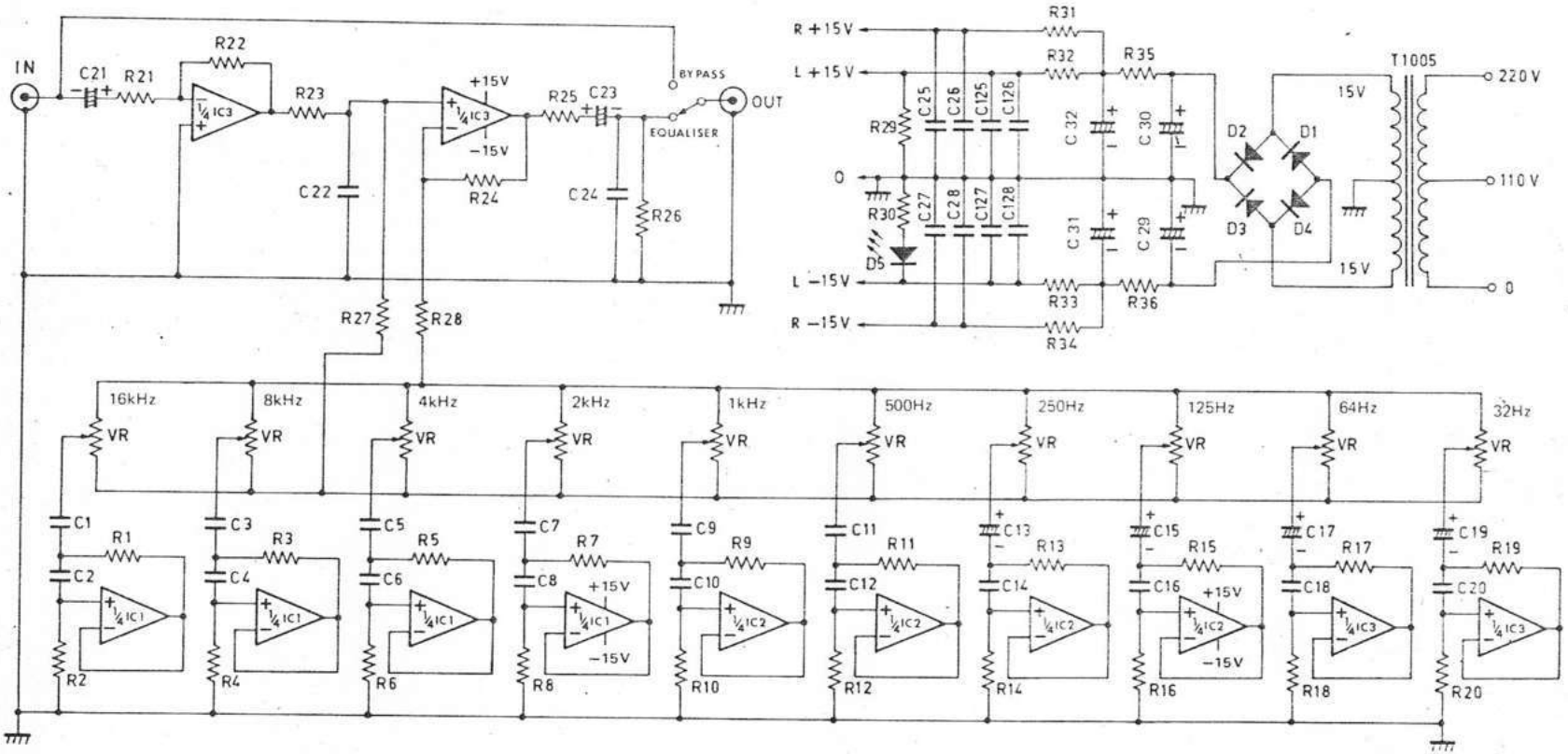

TL-1005

CIRCUIT DIAGRAM

TL-1005

P.C. BOARDS

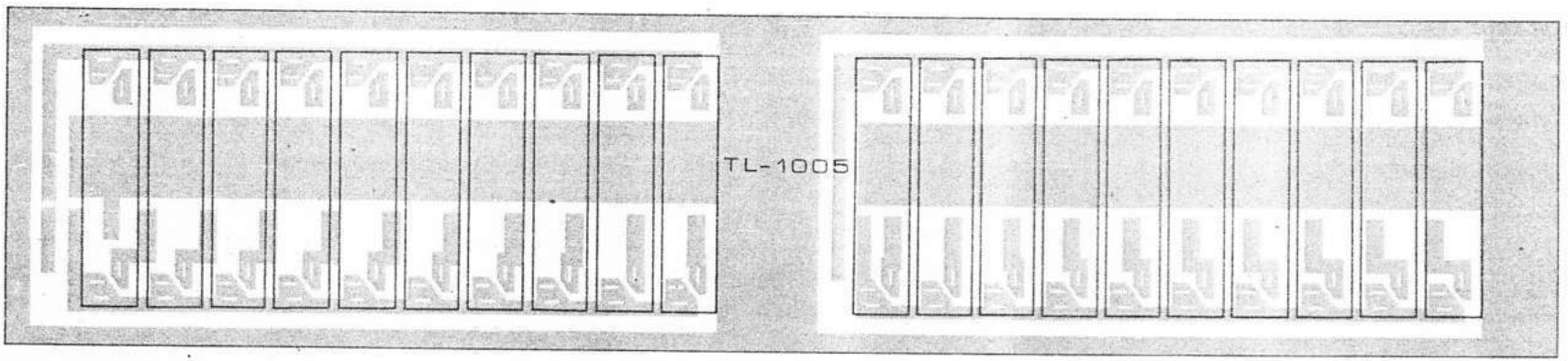

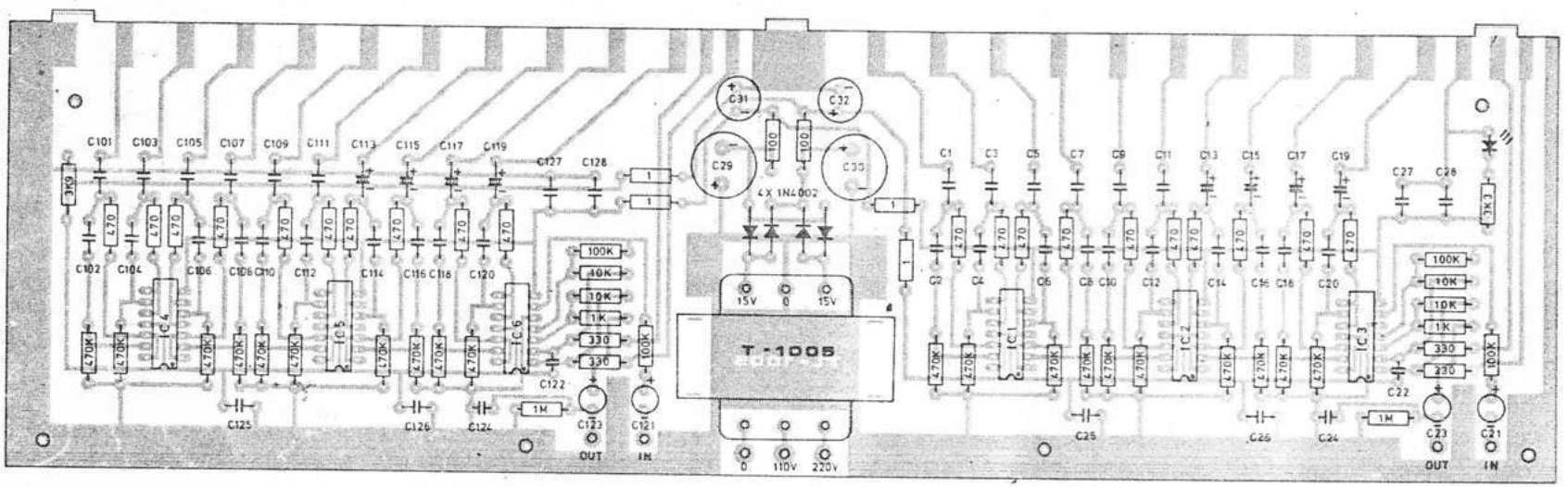

DIODE DETECTOR RADIO RECEIVER

C.1. ..... 33pF
C.2. ..... 200pF
VC. 200pF
D.1.2. ..... 1 N 60

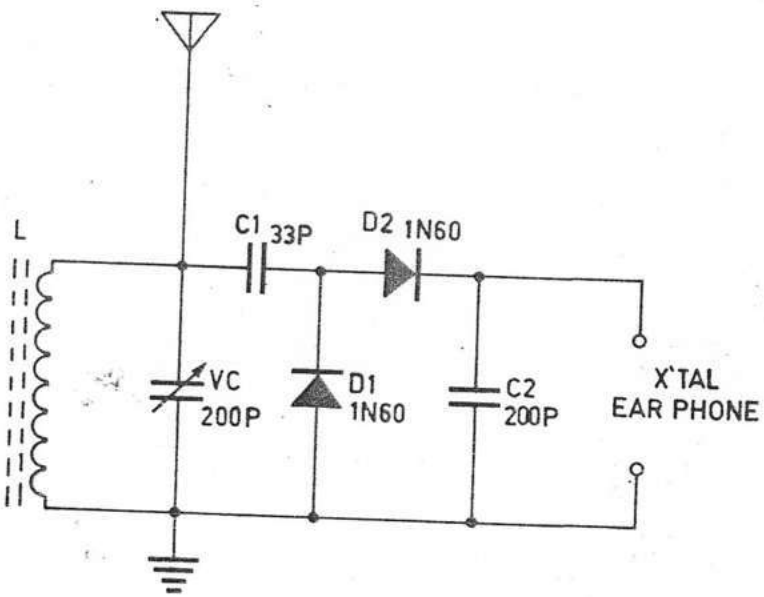

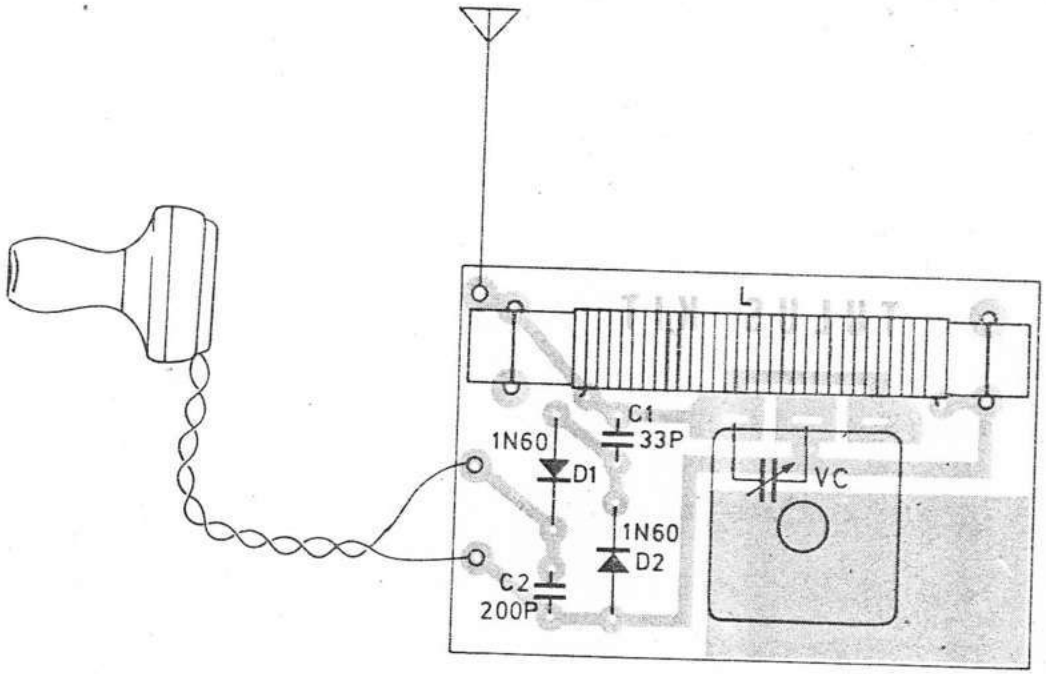

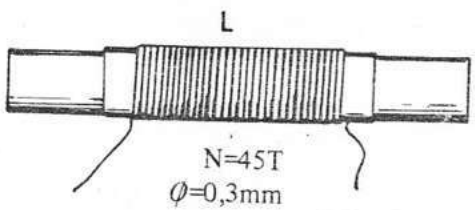

RADIO MW

PARTS LIST

R.1	100K	C.3	1uF
R.2.3	1K5	C.4	0.02uF
R.4	470	C.5	0.05uF
R.5	10	C.6.7	220uF
V.R.	A.5K	C.8	10uF
V.C.	500pF	D.1.2	1N 4148
C.1	0.01uF	I.C.1	LM 386
C.2	0.1uF	I.C.2	ZN 414

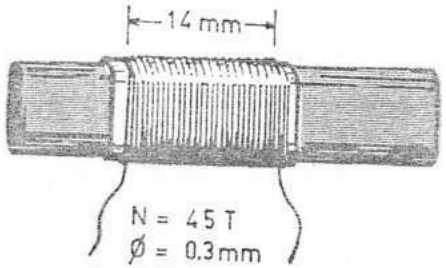

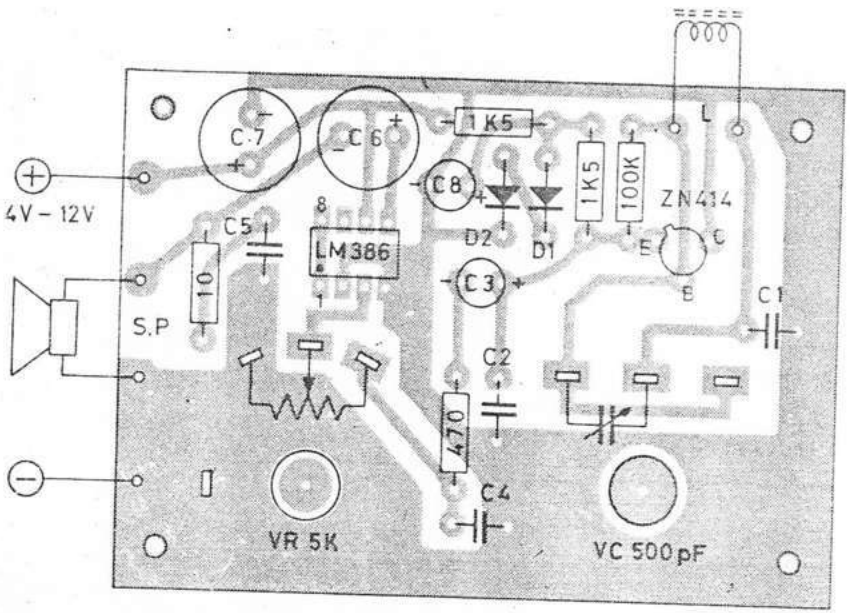

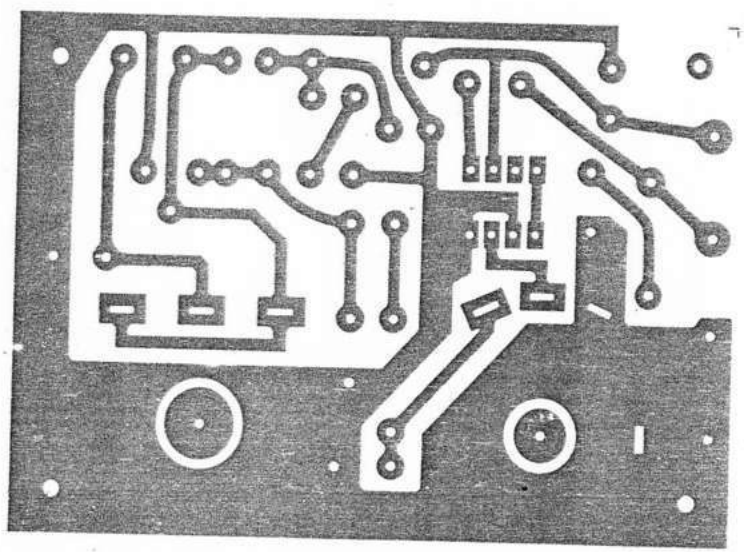

RADIO MW - 700 Kc — 1300 Kc

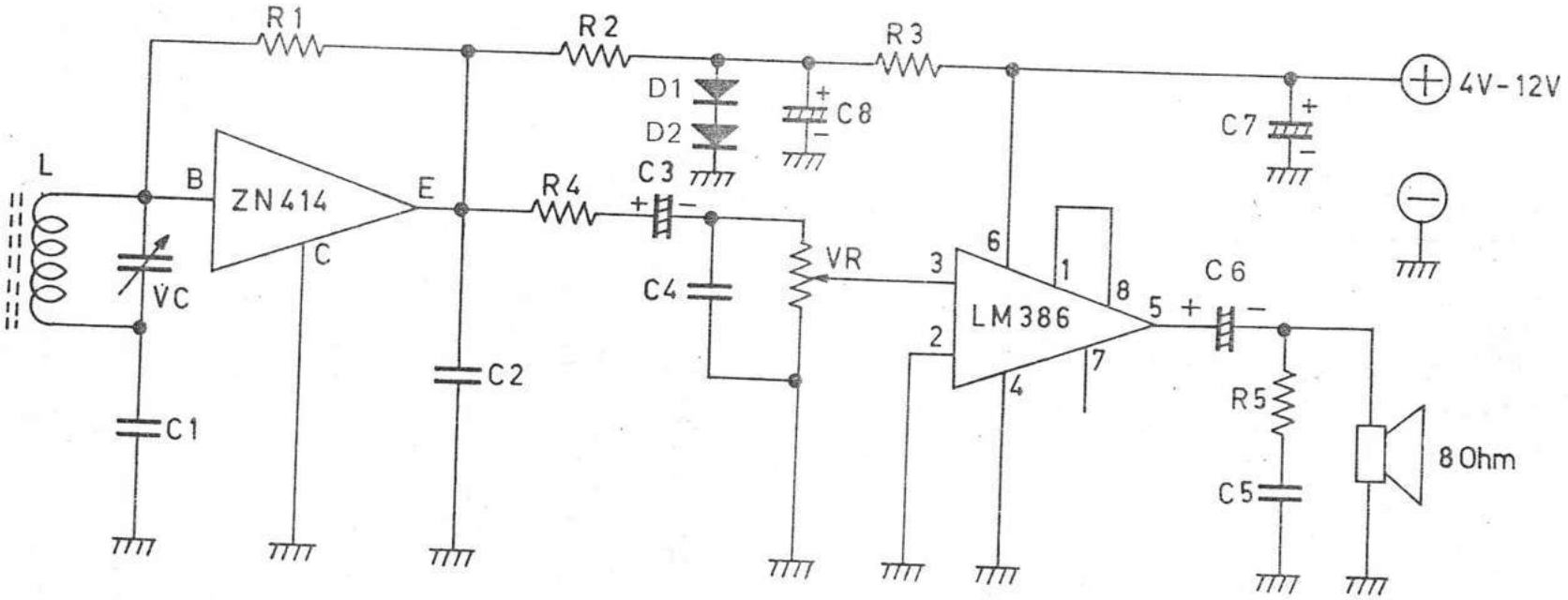

CIRCUIT DIAGRAM

FM WIRELESS MICROPHONE

R.1	33K
R.2	150
R.3	47K
R.4	180
C.1	1μF
C.2.6	2KpF
C.3	1KpF
C.4.5	10pF
TR.1.2	C838

Condenser Mic

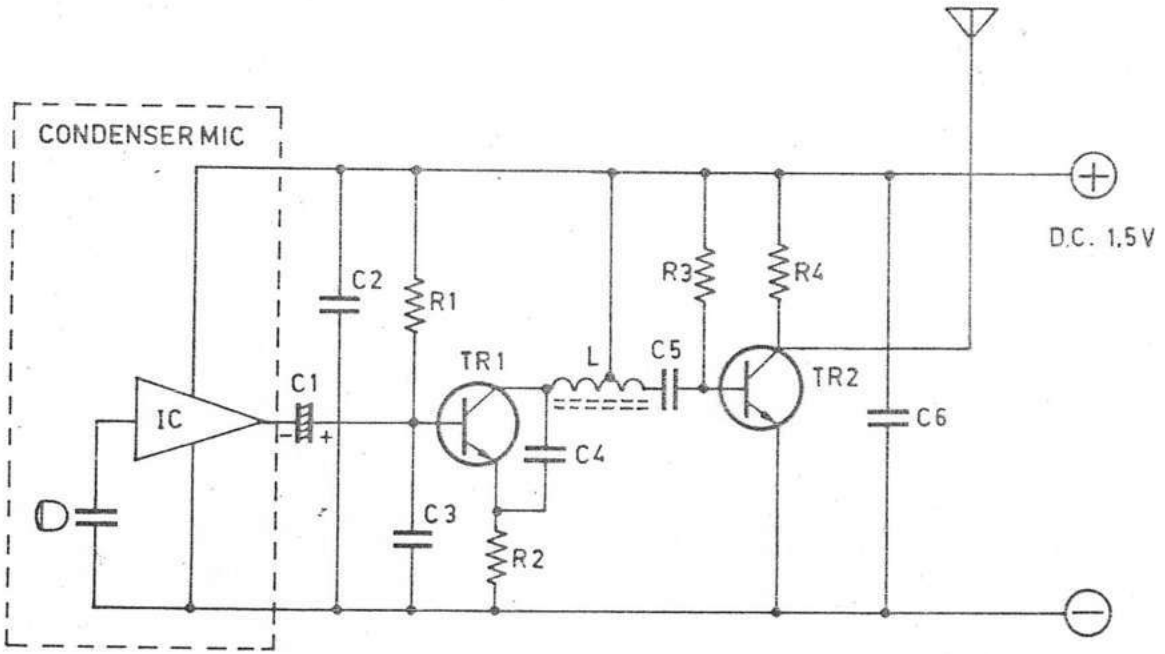

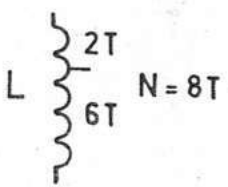

88 MHz — 108 MHz

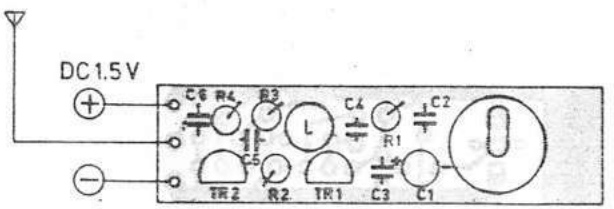

60 Hz TIME BASE X'TAL OSCILLATOR

R.1	470
R.2.3	3K3
R.4	16M8(3x5M6)
C	33pF
VC	30pF
X'TAL	3,579545
I.C.	MM 5369
D	ZD 7,5V

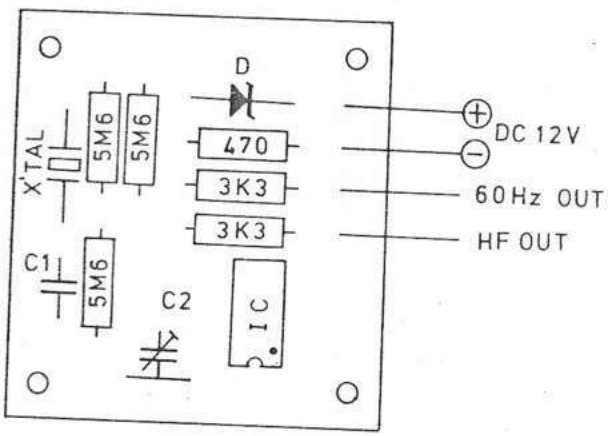

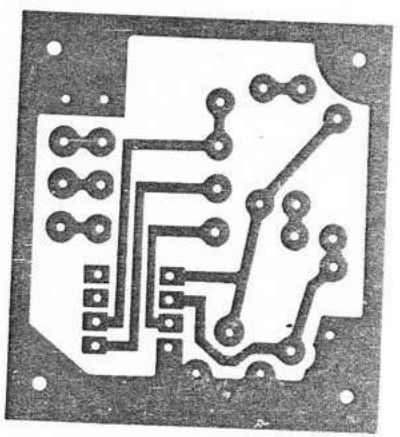

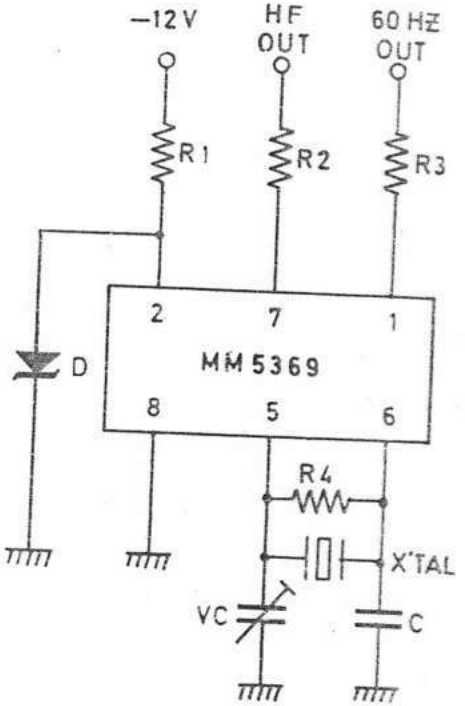

PRE-2A

PARTS LIST

R.1.101 . . . . . 5M6
R.2.102 . . . . . 180K
R.3.103.5.105.12 . . . . . 1 K
R.4.104 100
R.6.106.11.111 . . . . . 4K7
R.7.107 . . . . . 2M2
R.8.108 . . . . . 27K
R.9.109 150

R.10.110 . . . . . 22K
R.13 . . . . . 1 M
R.14 . . . . . 82K
VR.1.101 . . . . . 10K

C.1.101 .4.104 . . . . . 0,1.uF/50V
C.2.102 . . . . . 470pF/25V
C.3.103 . . . . . 33uF/10V

C.5.105 . . . . . 5KpF/25V
C.6.106.7.107.9.109 . . . . . 10uF/10V
C.8.108 . . . . . 22pF/25V
C.10 . . . . . 100uF/25V
C.11 . . . . . 220uF/10V
IC. RC4739
TR . . . . . 4x SE 4010
D. . . . . ZD 24V

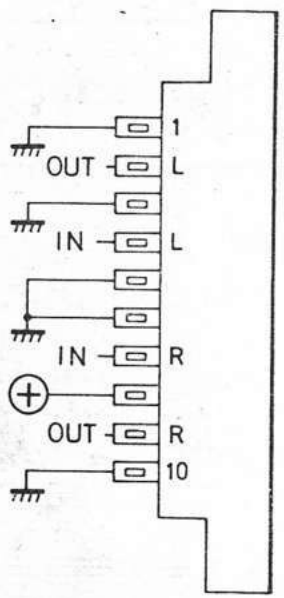

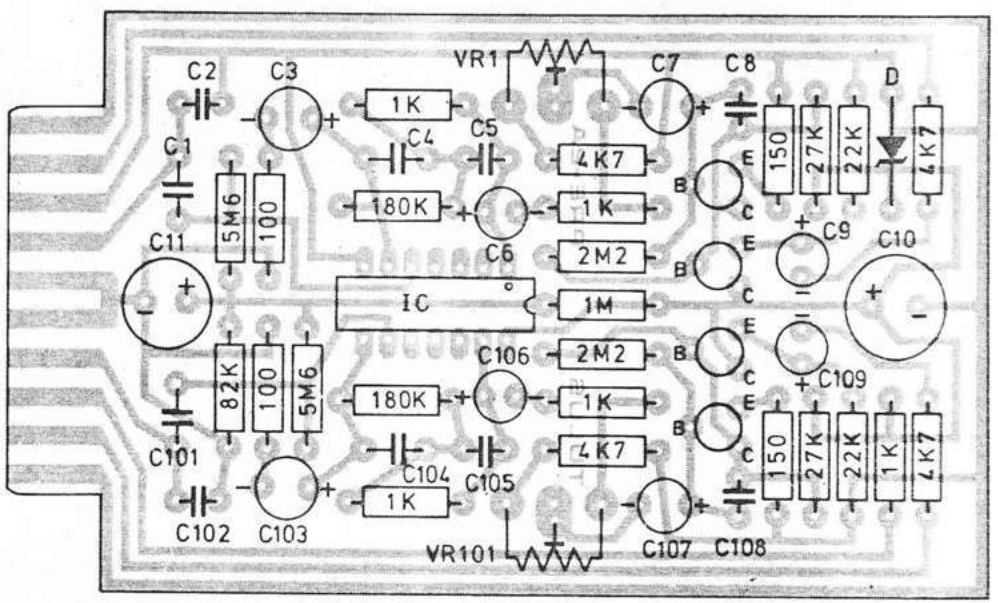

STEREO TAPE HEAD PLAYBACK AMPLIFIER

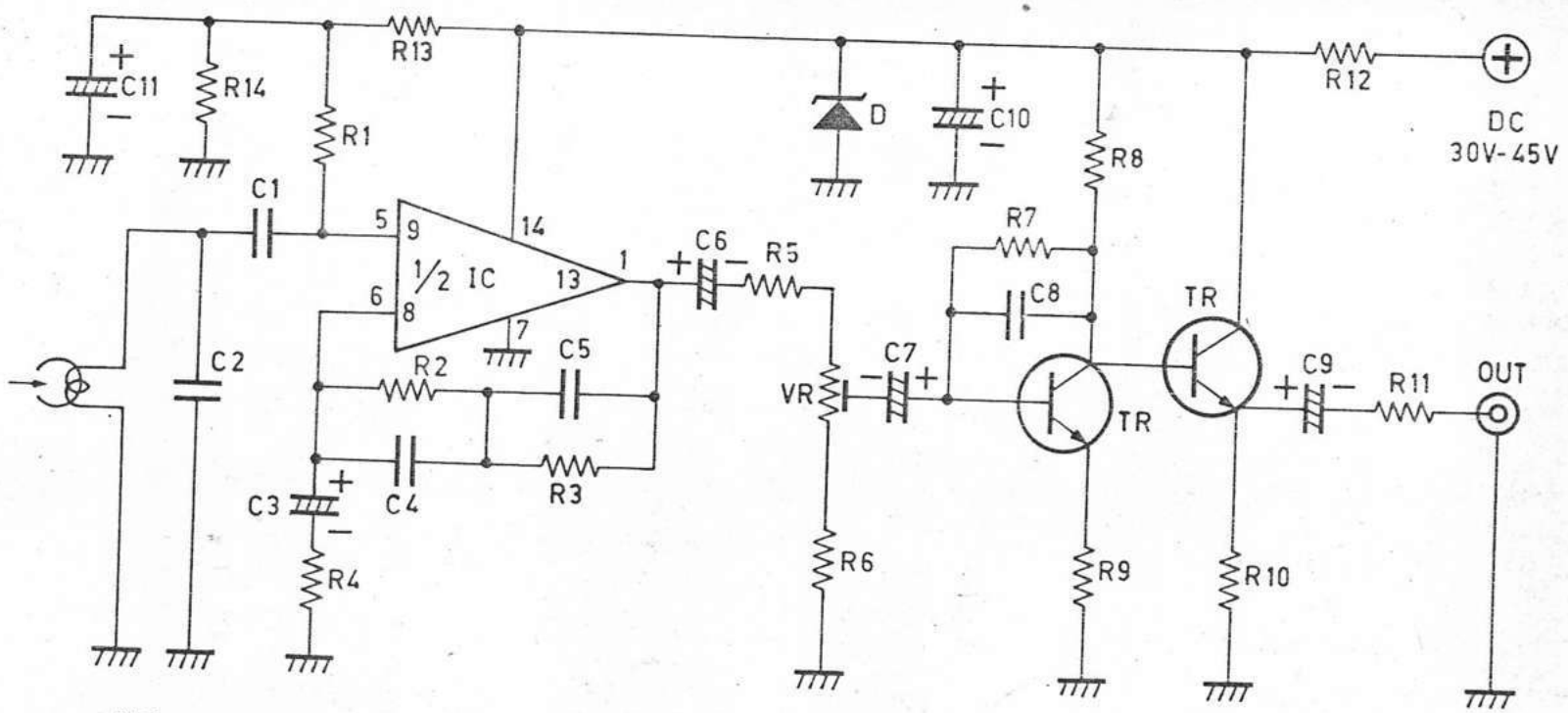

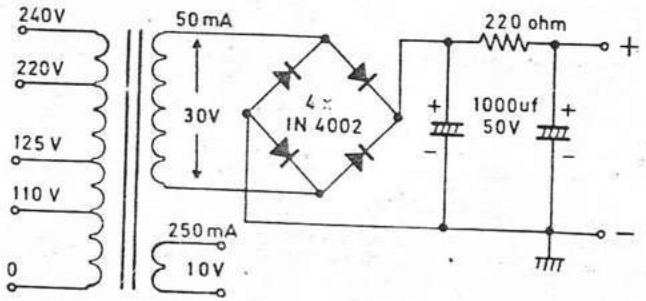

PRE-2A

CIRCUIT DIAGRAM

D.C. 4V-9V REGULATOR

R.1.2	2,2K
R.3	15K
R.4	22K
R.5	10K
VR	2K
C.1.2	2,2uF/25V
C.3	10 uF/10V
TR.1.2.3	FCS 9014D
TR.4	BC 140
D	ZD 12V

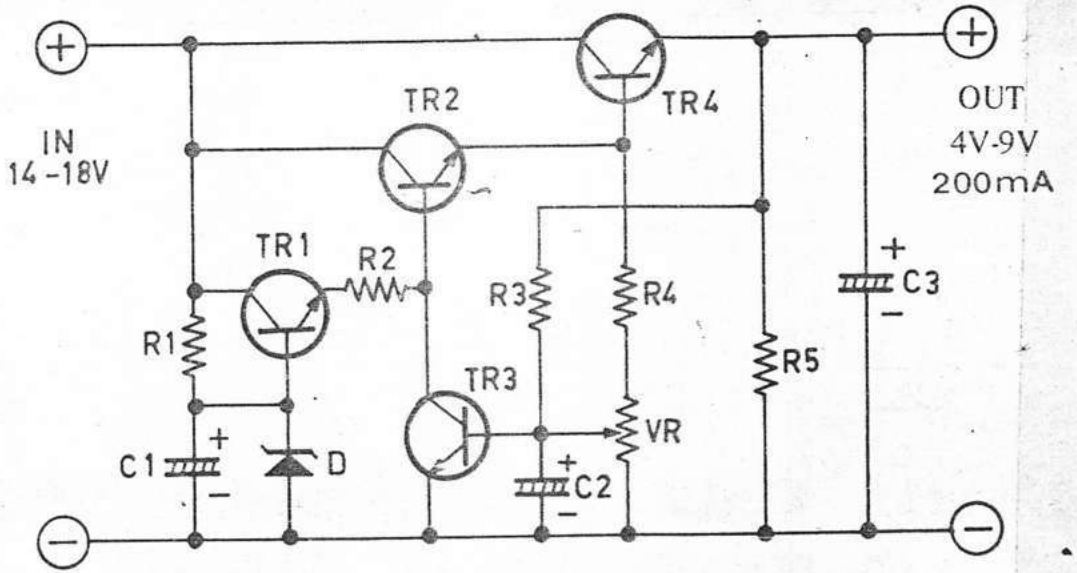

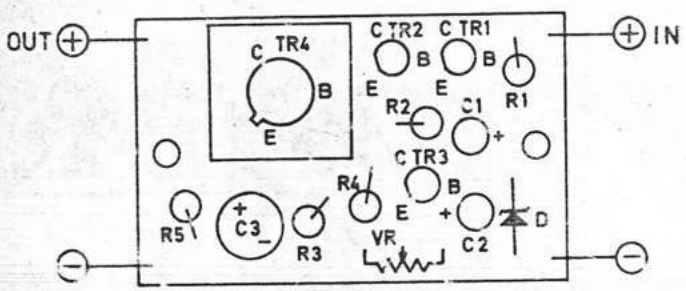

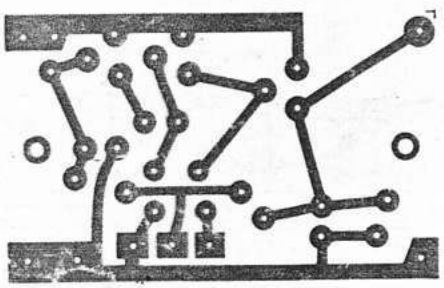

2N 2646	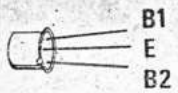	2SB 178	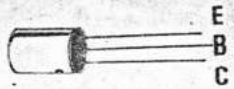
BC 107 BC 109 2N 2222A ZN 414	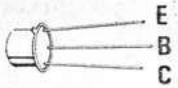	C 1061 D 317 B 512	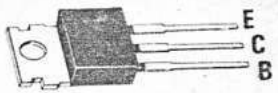
FCS 9012 FCS 9013 FCS 9014 FCS 9015 SE 4010	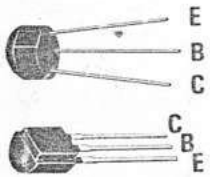	2SB 337 2SB 407 MJ 2955 MJ 4502 2N 3055	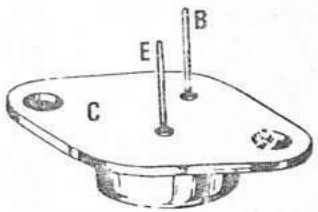
BC 141 BC 160 BC 161	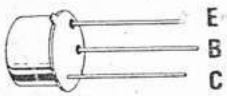	SPD MEL 11 MEL 12	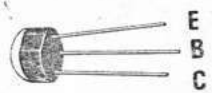
2N 3569 2N 4355	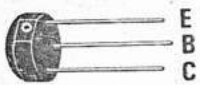	PUT MEU 21	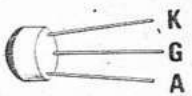
Q 4004LT Q 4006LT	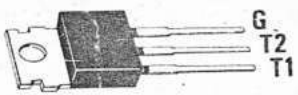	FOR 2B F7-21S	
C 838		T 103 C 10	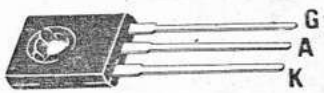
C 1162	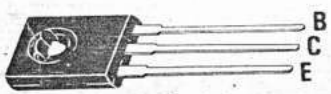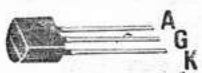	2N 5061 EC 103D